

NAS-8510

IP Remote PA Controller

SPON IP Remote PA Controller NAS-8510 is a programmable remote controller (TCP/IP) for management software XC-9000. With multiple audio input interface , it can realize AOD of local audio sources .It is widely used in outdoor playground, multi-function hall and other scenes.

one-button broadcasting | Support AOD | 4.3" LCD Screen

MAIN FEATURES

▲ Display and Installation Flexibility

- 4.3-Inch LCD Display: Features a clear and vibrant display, suitable for convenient viewing on desktops or when wall-mounted.

▲ Audio Input and Output

- Multiple Audio Inputs: Equipped with 8 channels of audio input, providing flexibility for connecting various audio sources.
- Single Audio Output: Includes 1 channel of audio output for transmitting audio to external devices or speakers.

▲ Broadcasting Capabilities

- Remote Zone Broadcasting: Supports remote broadcasting to designated zones or to all zones, enhancing flexibility in audio distribution.

▲ Audio Source and Playback

- Software and SD Card Support: Capable of playing audio from software XC-9000 or from an SD card, offering versatile options for audio playback.

▲ Convenient Control Features

- Programmable Buttons: Features programmable buttons for one-press broadcasting functionality, simplifying the process of initiating broadcasts.

SPECIFICATION

Power Parameters

Power Supply	DC12V,2A
Standby Power Consumption	≤5W

Audio & Video Parameters

Audio Codec	MP2, MP3, PCM, ADPCM
Audio Sampling & Bit Rate	8kHz~44.1kHz, 16bit, 8kbps~320kbps
S/N(Broadcast-Speaker)	≥90dB
Frequency Response	20Hz~16kHz

Network Parameters

Network I/F	10BASE-T/100BASE-TX RJ45
Network Protocol	TCP/IP、UDP、ARP、ICMP、IGMP、SIP、HTTP
Configuration Method	Web Interface or DevConfig Tool

Mechanical & Environment Properties

Display Screen	4.3 inch LCD ,480*272
Mounting Method	Wall-mounted
Installation Environment	Dry Indoor Locations Only
Operatiing Temperature	-10°C~+50°C
Operating Humidity	≤90% RH non-condensing
Housing Material	Steel
Color	Gray
Product Dimensions	315×200×44mm
Product Weight	2.8KG
Product Warranty	2 Years Limited

ACCESSORIES

1×Cover Board
1×433M Antenna
4×Plastic Expansion Sleeve(F7)
4×Cross screw with half round head(ST4*25)
2×Countersunk Cross Screw(M3*6)
1×Connection Cable(X2120)
1×Quick Installation Guide
1×Power Adaptor(DC12V/2A)

INTERFACE DESCRIPTION

[Front Panel]

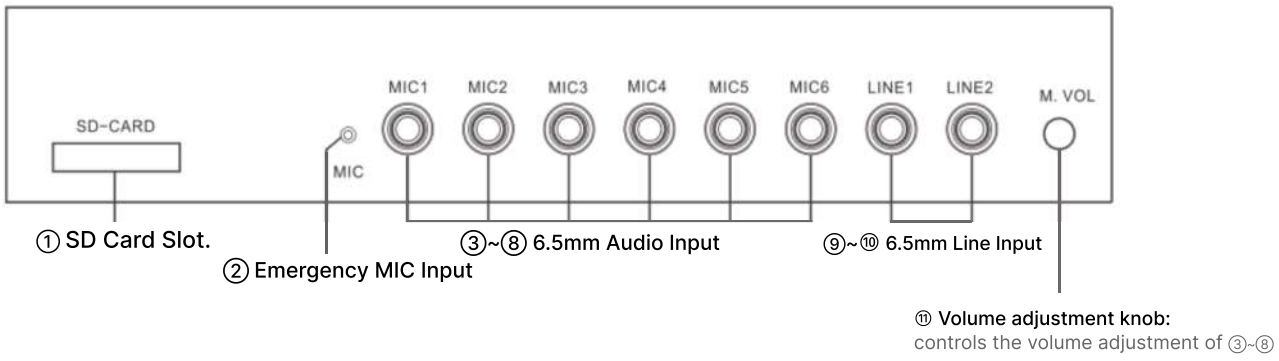

[Rear Panel]

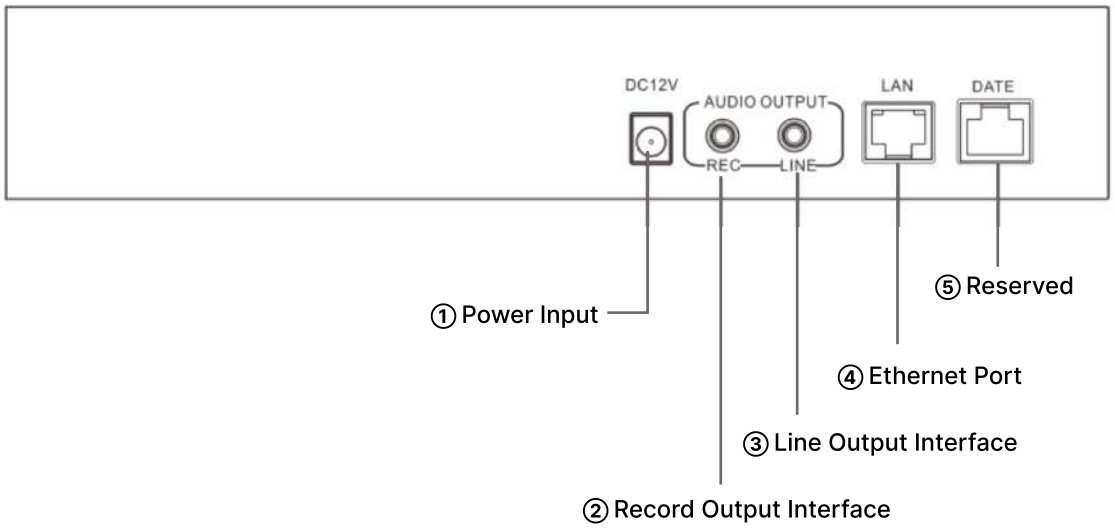

CONNECTION DIAGRAM

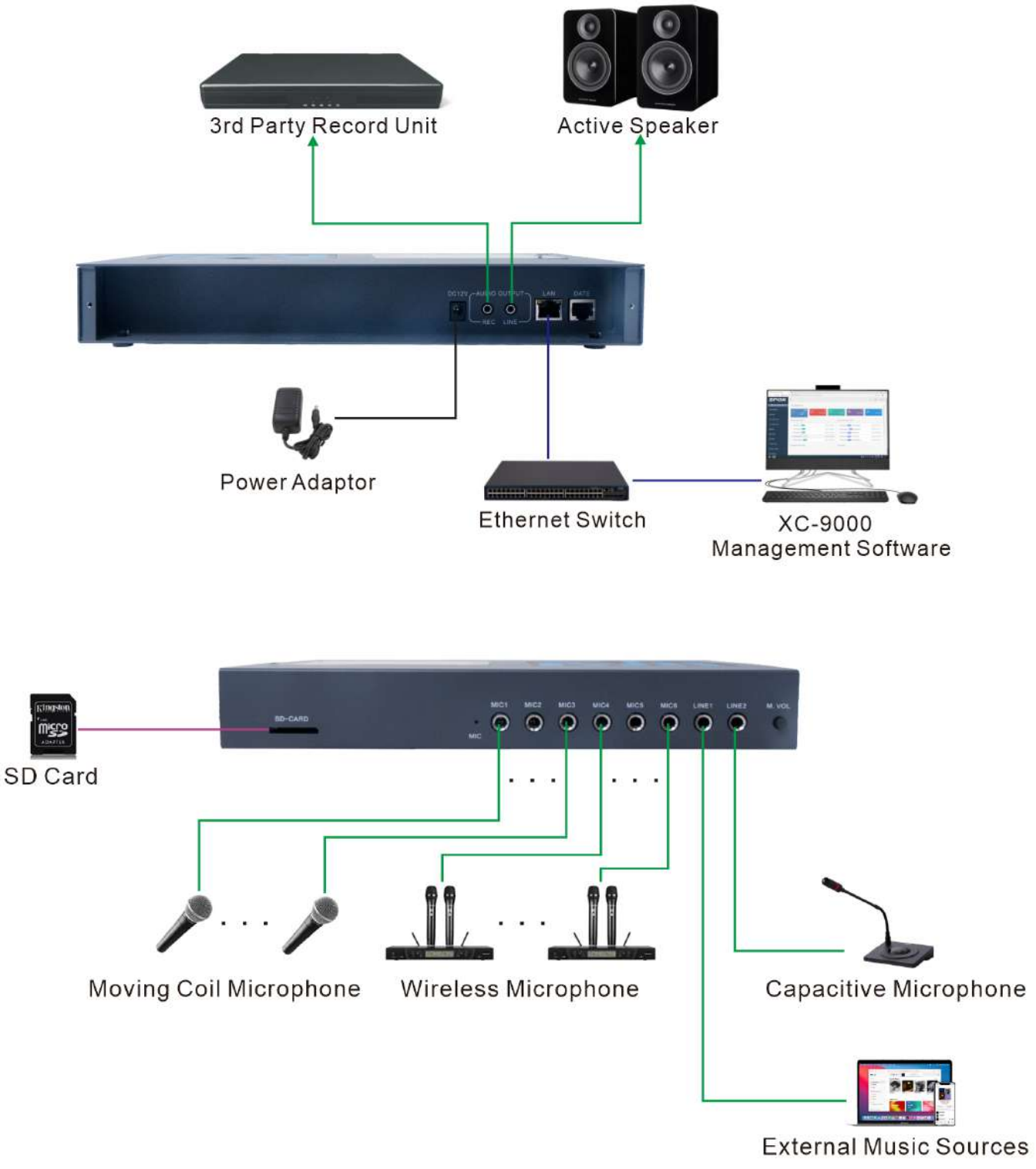

APPLICATION

Application 1

The IP Remote PA Controller NAS-8510 can initiate broadcast to the designated zones .During the broadcasting , the external audio sources(wireless mic /SD card...) which connected to the IP remote PA controller can be played on the front-end terminals .

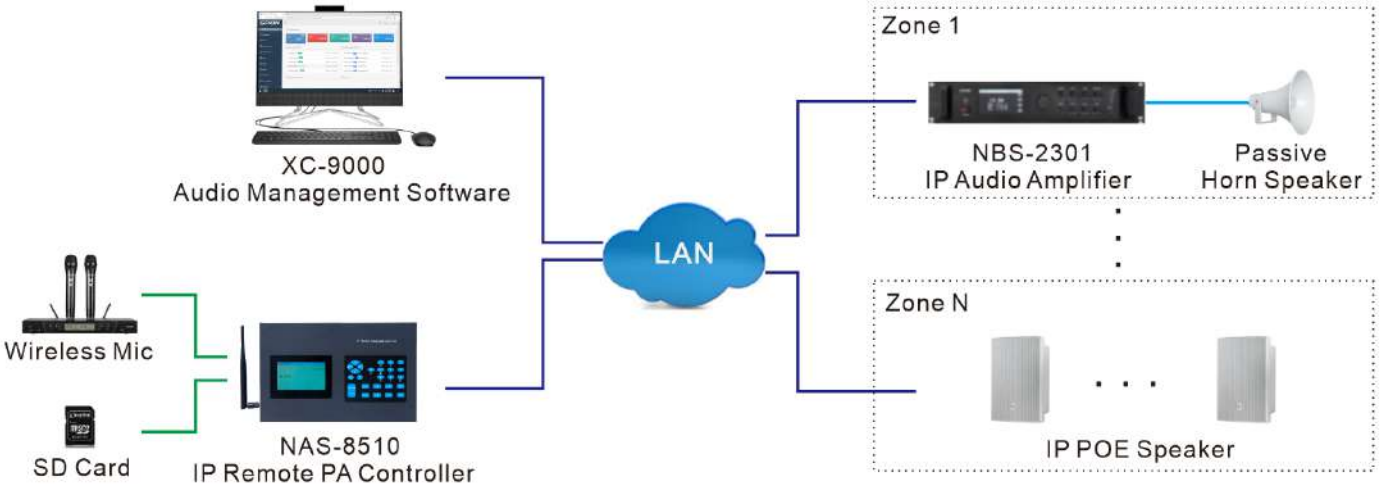

DIMENSION

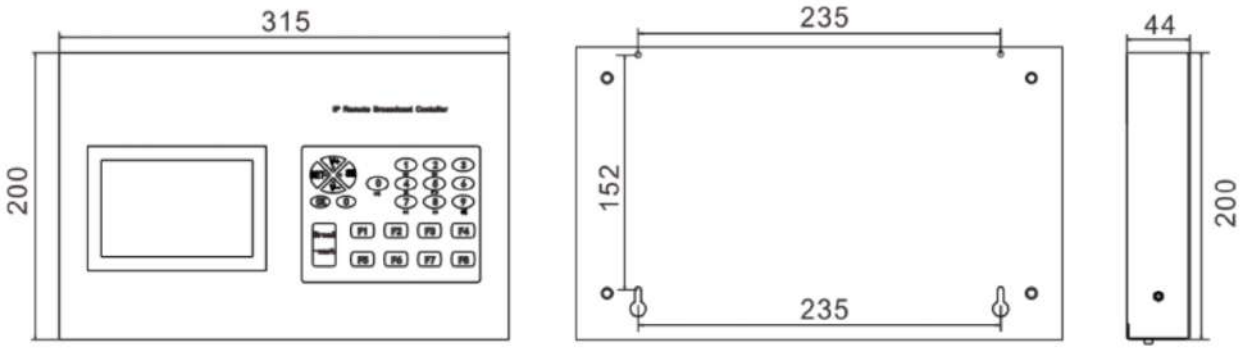

INSTALLATION

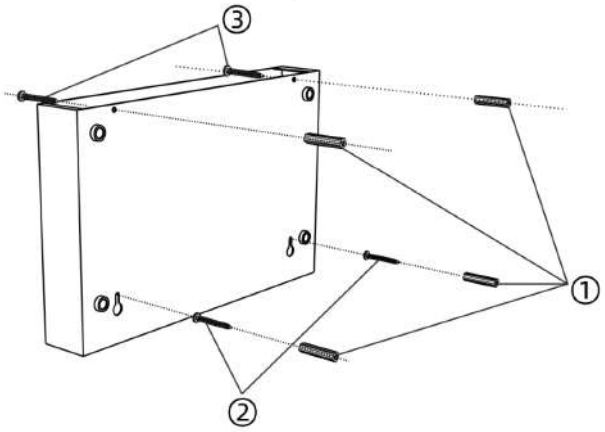

Step1: Drive 4 plastic expansion sleeves into the wall.

Step2: Drive 2 self-tapping screws into the wall, leave a spacing of about 6-8mm between the screw head and the wall, and hook the two hoist holes at the bottom of the equipment on the screw head.

Step3: Drive 2 self-tapping screws into the wall through the two mounting holes in the upper part to fix the device.

SPON SPON Communications Co., LTD

Address: No.70, Nantang Road, High-Tech Zone, Changsha, China. **Mobile:** +86 138 7314 3517

Email: inquiry@sponcomm.com **Tel:** +86 731 8557 0190

www.sponcomm.com