

NAC-920

20Watt 100Volt Column Loudspeaker

Outdoor waterproof column speaker, for human voice, music has the real acoustic amplification characteristics, made of aluminum alloy material, more suitable for outdoor all-day use. Such as tennis courts, swimming pools, gardens and so on.

Constant Voltage 100V

Line Array Speaker

CIRCUIT DIAGRAM

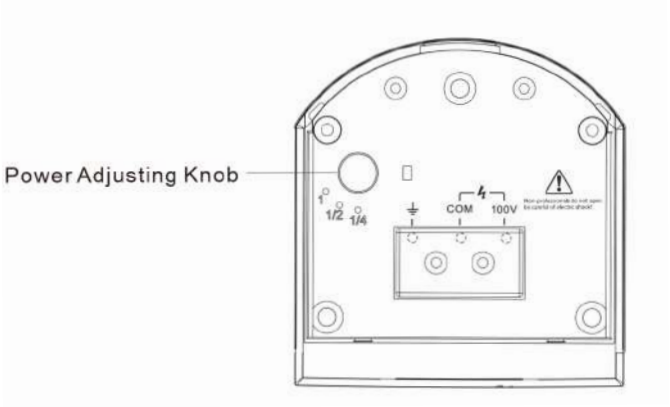

Wiring description:

When wiring, the power amplifier output COM shall be connected with the COM terminal, and the power amplifier output 100V shall be connected with the 100V terminal .

With power adjustment knob, can choose 1, 1/2, 1/4 gear

DIMENSIONAL DRAWING

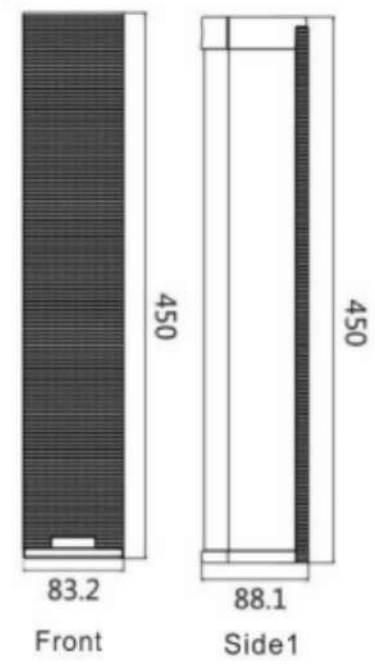

SPECIFICATION

POWER PARAMETERS

Rated Power:	20W（20-10-5W）
Max Power:	30W
Input Voltage:	100V

AUDIO PARAMETERS

Sensitivity:	92dB±3dB
Frequency Range:	200Hz-20KHz

MECHANICAL & ENVIRONMENT PROPERTIES

Installation Method:	Wall-mounted
Installation Environment:	Dry Outdoor Locations
Mask Material:	Steel ,Silver
Shell Material:	Aluminium Alloy+Plastic , Silver
Working Temperature:	-25°C~+55°C
Working Humidity:	≤95%（No condensing）
Dimension:	83.2×88.1×450mm
Weight:	2.3kg

ACCESSORIES

- 1×Cross hexagonscrew(6*20)
- 1×Silica gel coil
- 1×Nut(M6)
- 1×Plastic coil
- 1×Mounting bracket
- 1×Fixed bracket
- 1×Installation Manual

APPLICATION

Application 1

The analog outdoor column speaker NAC-920 can be connected with constant voltage amplifier for receiving broacast or announcement from server software or IP paging mic .

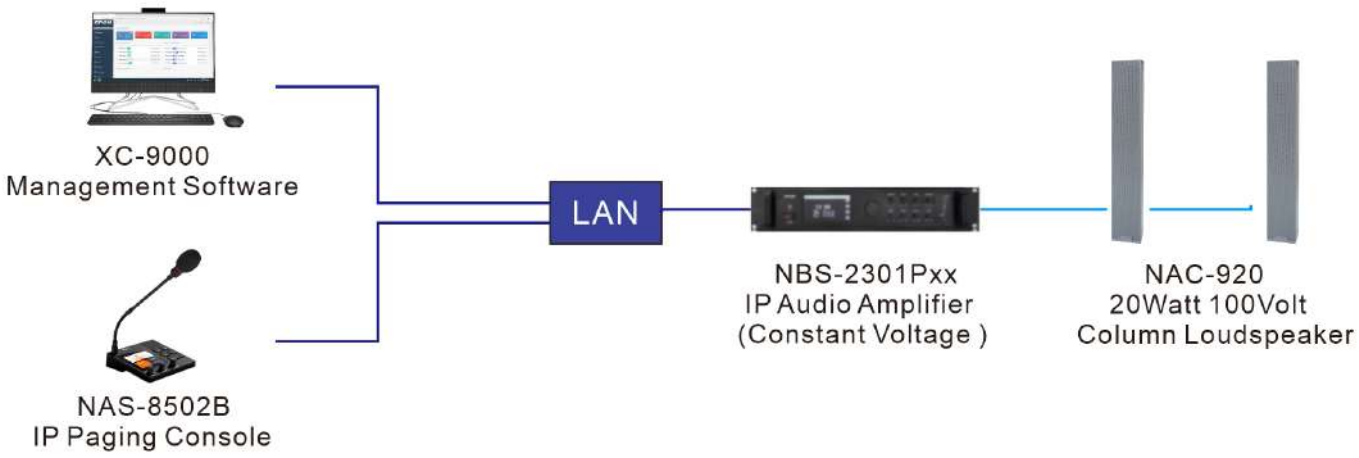

INSTALLATION DIAGRAM

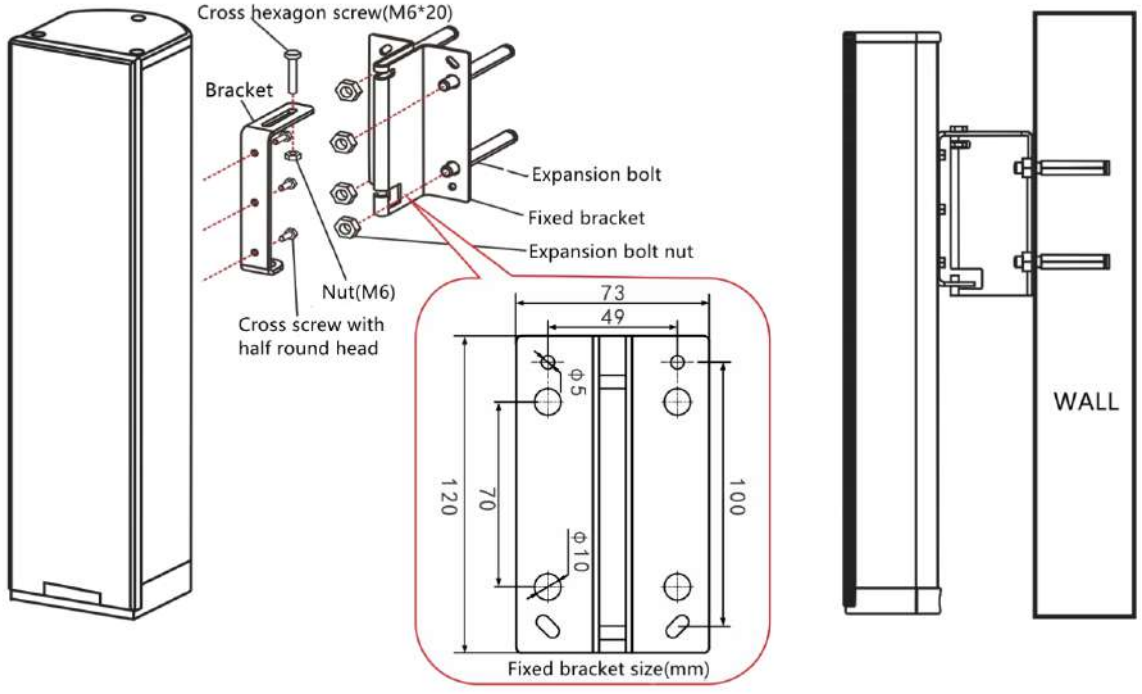

SPON SPON Communications Co., LTD

Address: No.70, Nantang Road, High-Tech Zone, Changsha, China. **Mobile:** +86 138 7314 3517

Email: inquiry@sponcomm.com **Tel:** +86 731 8557 0190

www.sponcomm.com