

NAC-301H

30 Watt 8 Ohm Cabinet Speaker

Elevate Indoor, True Sound.

Wooden cabinet | Constant Impedance

MAIN FEATURES

- Wooden box, using high bass double speaker unit design. Compound speaker drum paper, clear sound quality, easy to install, The main application scenario is the classroom

CIRCUIT DIAGRAM

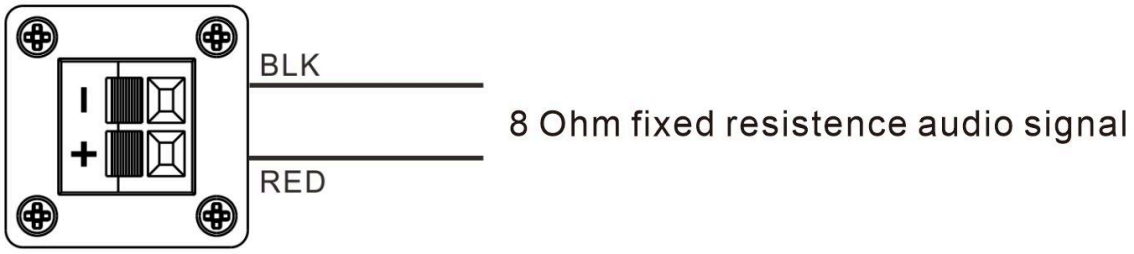

Wiring:

The RED terminal is connect to RED terminal of XC-9602B (IP AUDIO SPEAKER).

The BLACK terminal is connect to BLACK terminal of XC-9602B(IP AUDIO SPEAKER).

SPECIFICATION

ELECTIRC PARAMETERS	
Max Power Rate	40W
Rated Power(PHC)	30W
Frequency(1kHz,1meter)	85dB±3dB
Valid Frequency Range(-10dB)	200-20kHz
Impedance	8 Ohm
Color Of Input Port	White

PRODUCT INFORMATION	
Product Size	290*117*215mm
Weight	2.5kg
Installation Method	Wall-Mounted

PRODUCT INFORMATION	
Shell	Wooden
Mesh	Metal

RAW METERIAL	
Working Temperature	-10°C~+45°C
Relative Humidity	< 95%(No Condensing)

DIMENSIONAL DRAWING

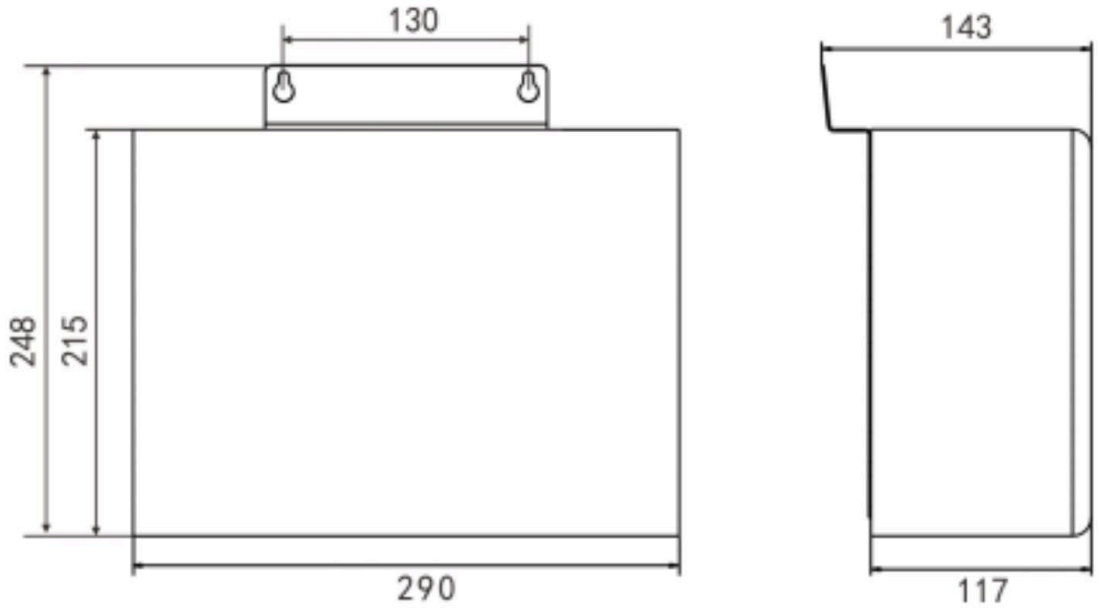

APPLICATIONS

The analog wall-mounted speaker NAC-301H can be connected with IP audio speaker XC-9602B for receiving broacast or announcement from server software or IP paging mic .

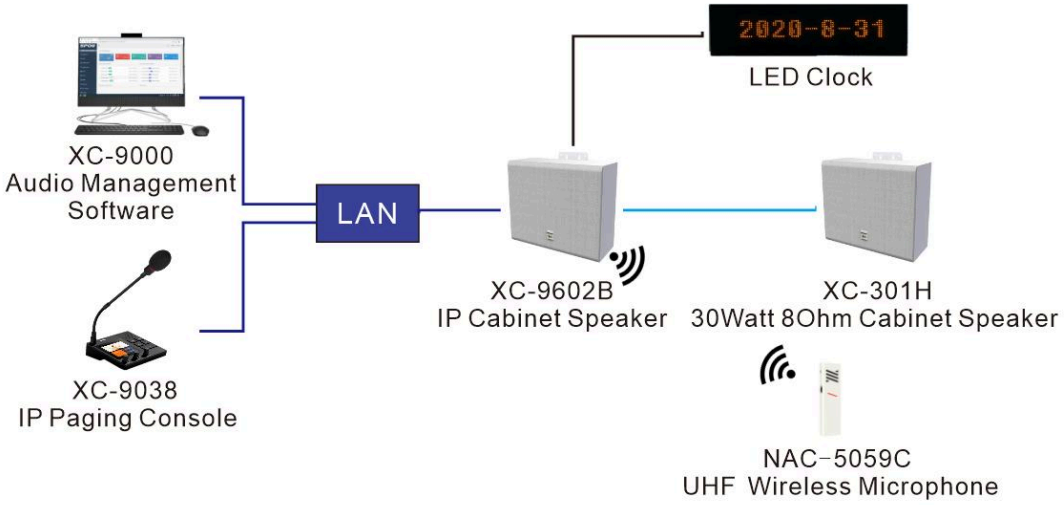

INSTALLATION DIAGRAM

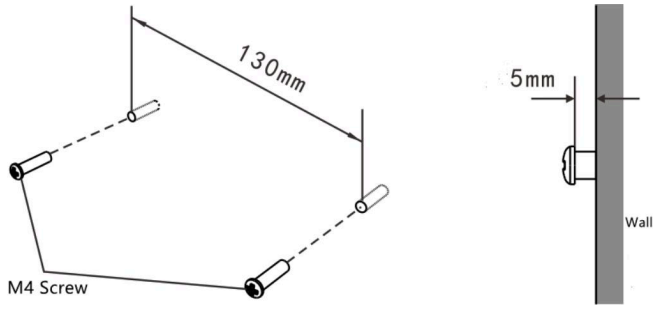

STEP1

install the two M4 screws horizontally to the wall according to the mounting holes, and leave a distance of about 5mm, as shown in the figure on the left:

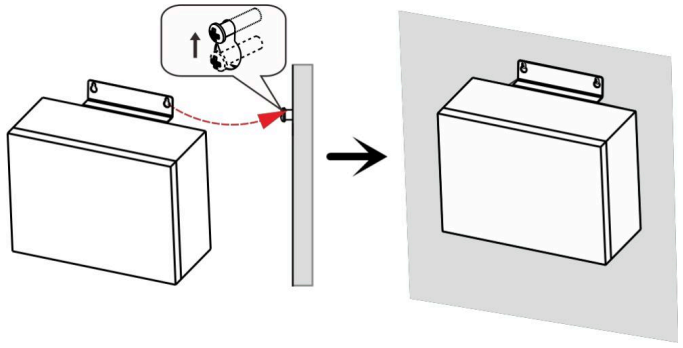

STEP2

Hook the two holes of the device to the screw head, and tighten the screw to ensure that it does not shake.

SPON SPON Communications Co., LTD

Address: No.70, Nantang Road, High-Tech Zone, Changsha, China. **Mobile:** +86 138 7314 3517

Email: inquiry@sponcomm.com **Tel:** +86 731 8557 0190

www.sponcomm.com