

NAC-301C-CP

Wall Speaker

Composite speaker diaphragm, with clear and melodious sound quality, easy and quick installation, composite suspension edge and damping treatment, longer lifespan

Constant Voltage | Clear Voice

CIRCUIT DIAGRAM

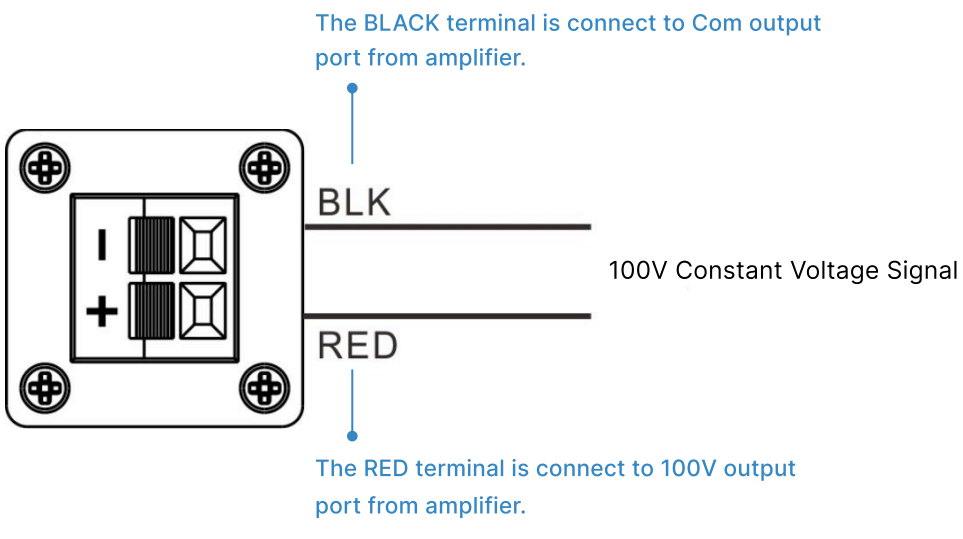

DIMENSIONAL DRAWING

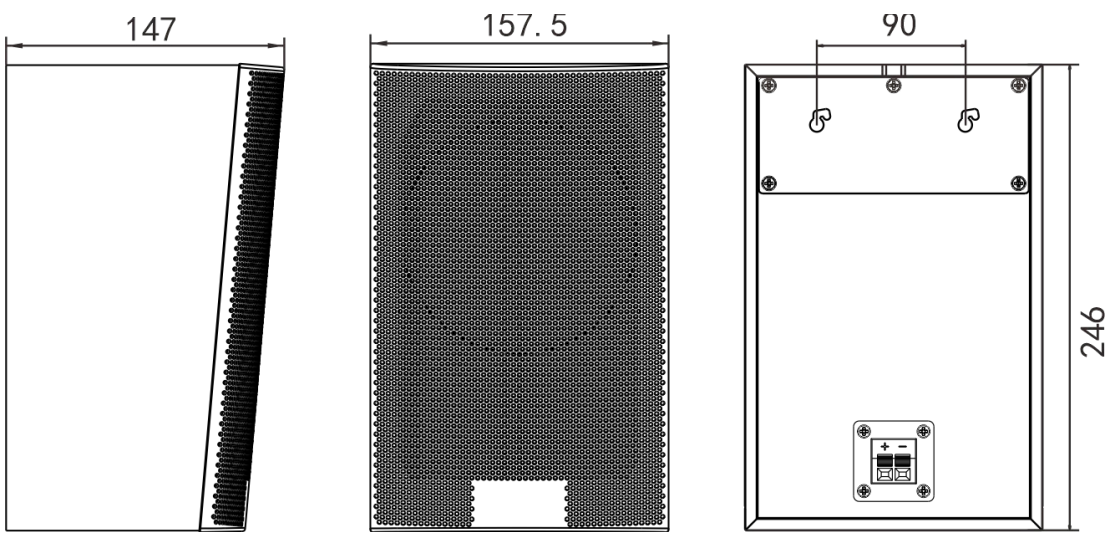

SPECIFICATION

POWER PARAMETERS	
Rated Power:	6W
Input Voltage:	100V

SPEAKER PARAMETERS	
Sensitivity:	87dB±3dB
Frequency Response:	200Hz-20KHz
Speaker Unit:	1×5 Inch Paper Cone Full Range Speaker

MECHANICAL & ENVIRONMENT PROPERTIES	
Mounting Method:	Wall-Mounted
Installation Environment:	Dry Indoor Locations
Product Color:	White
Body Material:	Wooden
Product Dimensions:	246*157*147mm
Product Weight:	1.5KG
Warranty:	2 Years

ACCESSORIES

- 1×Installation Manual
- 1×Certification Card
- 3×Plastic Expansion Set
- 3×Cup Head Self-Tapping Screw(M4*35)
- 1×Bracket

APPLICATION

Application 1

The 10Watt 100Volt Wall Mount Speaker NAC-301C-CP can be connected with IP Amplifier XC-9508 for receive broacasting or announcement from Audio Management Software or IP paging Console.

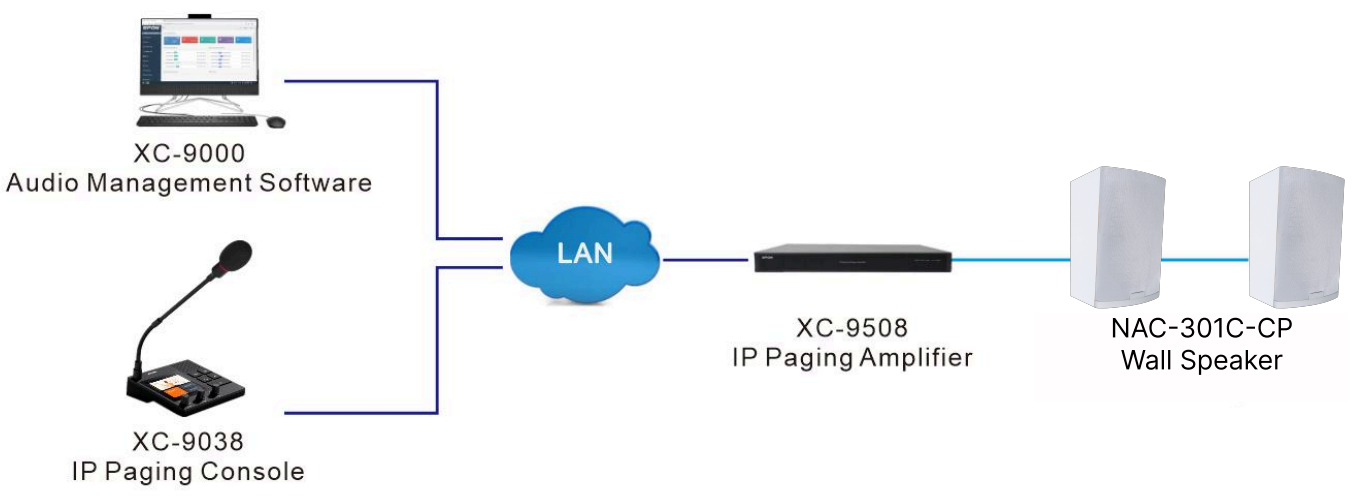

INSTALLATION INSTRUCTIONS

STEP 1

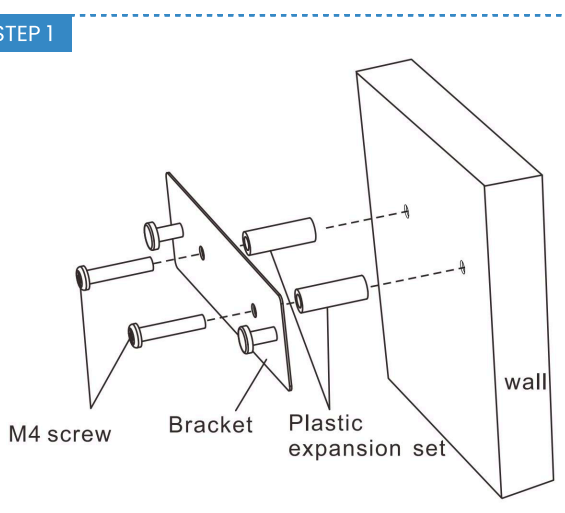

Use 2 plastic exnansion sleevesand 2 M4 screws to install the brackethorizontally.

STEP 2

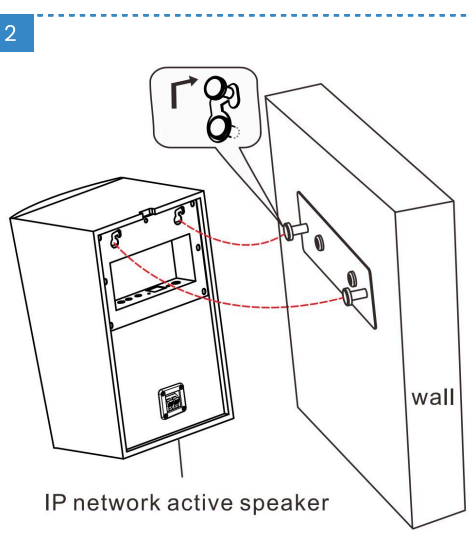

Align the two mounting holes on the back of the device with the two rivets ot the bracket iinsert itl from the large opening of the mounting hole, and then move it un and right to iam and buckle the device on the rivets of the bracket on the wall.

SPON SPON Communications Co., LTD

Address: No.70, Nantang Road, High-Tech Zone, Changsha, China. **Mobile:** +86 138 7314 3517

Email: inquiry@sponcomm.com **Tel:** +86 731 8557 0190

www.sponcomm.com