

NAC-2305

Wall Mount Speaker

—

The NAC-2305 is a wall-mounted speaker with clear and pleasant sound. It features a standard U-shaped bracket that allows for multi-angle mounting or linear combination installation, making it suitable for various indoor environments.

70V/100V Fixed Voltage

Audio Amplification

SPECIFICATION

Frequency Response	90-20KHz
Sensitivity	86dB±3dB(1m/1w)
Rated Power	40W
Power Taps	40W/20W/10W/5W&8Ω
Line input	100V/70V
Material	HIPS
Grill	Powder Coated AL Mesh
Component	5" Woofer+1"Silk
Finished Colour	White
Weight	3.68kg
Dimension(mm)	196*157*295
Operatiing Temperature	-25°C~+55°C
Warranty	2 Years

CIRCUIT DIAGRAM

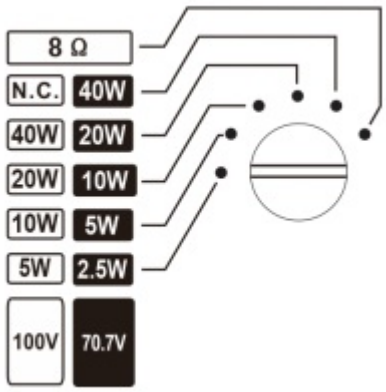

Wiring:

When wiring, the power amplifier output COM (common terminal) should be connected to the black cable, and the 100V output of the power amplifier should be connected to the white cable.

- When using the rated power of 40W: set the power selector switch to the 40W position.
- When using the rated power of 20W: set the power selector switch to the 20W position.

INSTALLATION

unit：mm

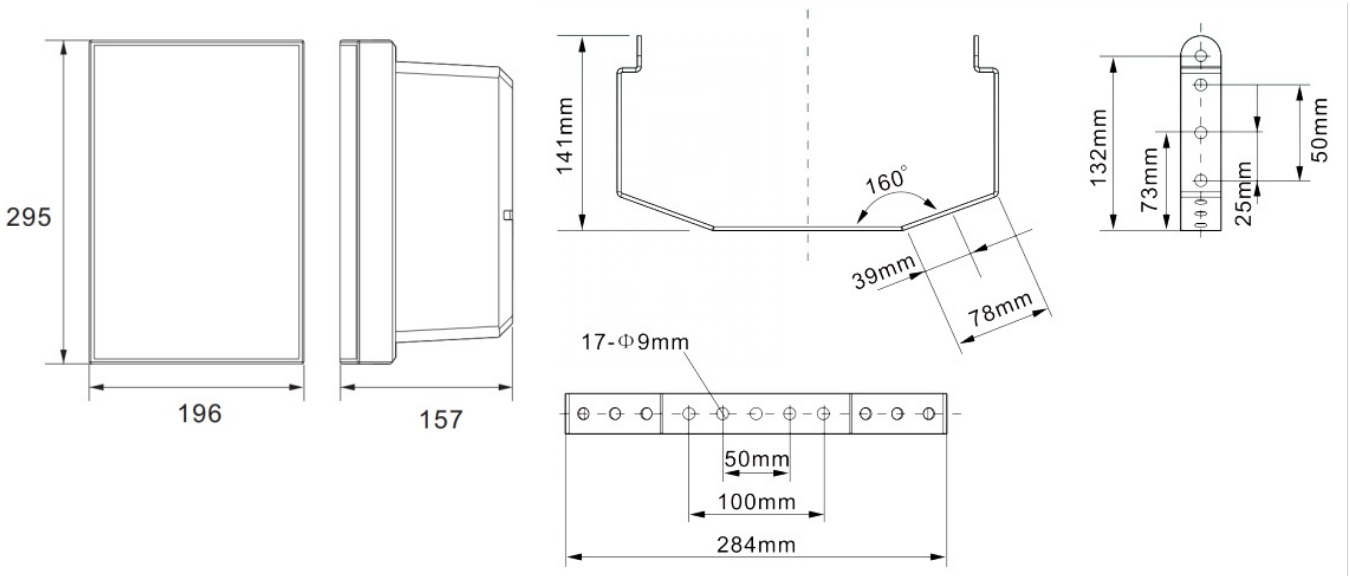

SPON SPON Communications Co., LTD

Address: No.70, Nantang Road, High-Tech Zone, Changsha, China. **Mobile:** +86 138 7314 3517

Email: inquiry@sponcomm.com **Tel:** +86 731 8557 0190

www.sponcomm.com