

LCS-5351Z

Digital Loop Repeater

MAIN FEATURES

- If the distance between conference central control unit and conference spliter is in 10m, single microphone loop can be connected to 35 microphones (more than 20 need to be connected to the repeater), double microphone loop together can be connected to 40 microphones(With 2 repeaters);
- Network cables Cat5E are required for connection. Shielded network cables of cat6 are recommended.

DIMENSIONAL DRAWING

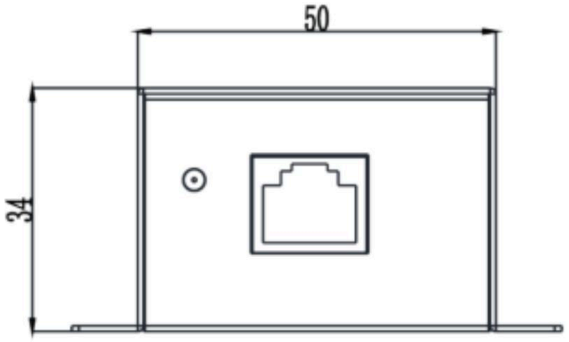

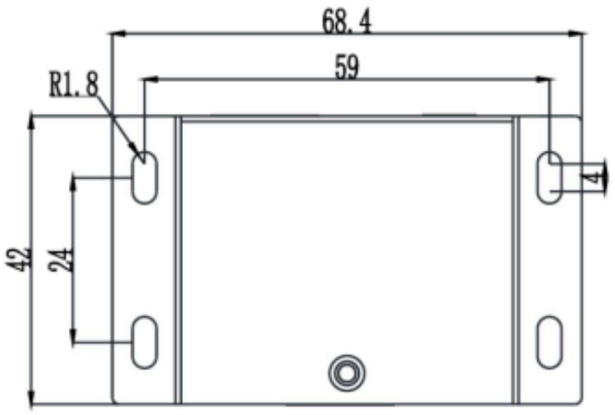

INTERFACE DESCRIPTION

[Front]

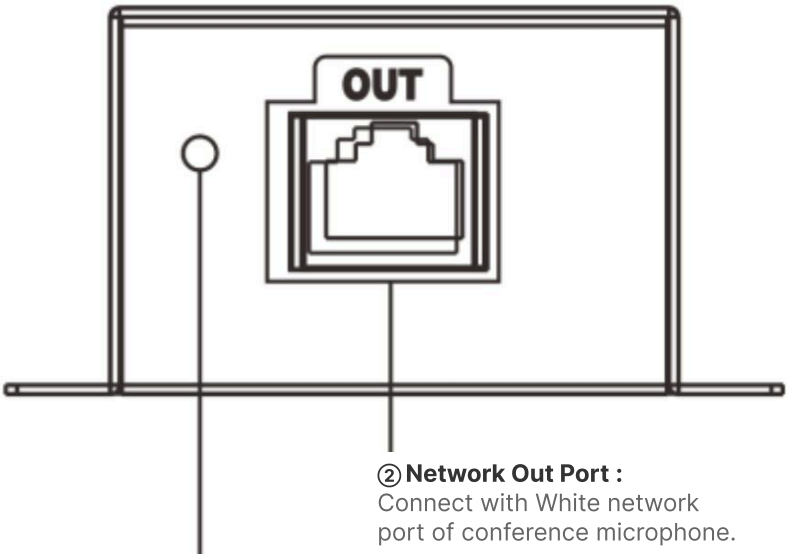

② Network Out Port :
Connect with White network port of conference microphone.

① Status Indicator Light :
When power on ,the light is turn on ; When power off or hardware fault ,the light is turn off.

[Back]

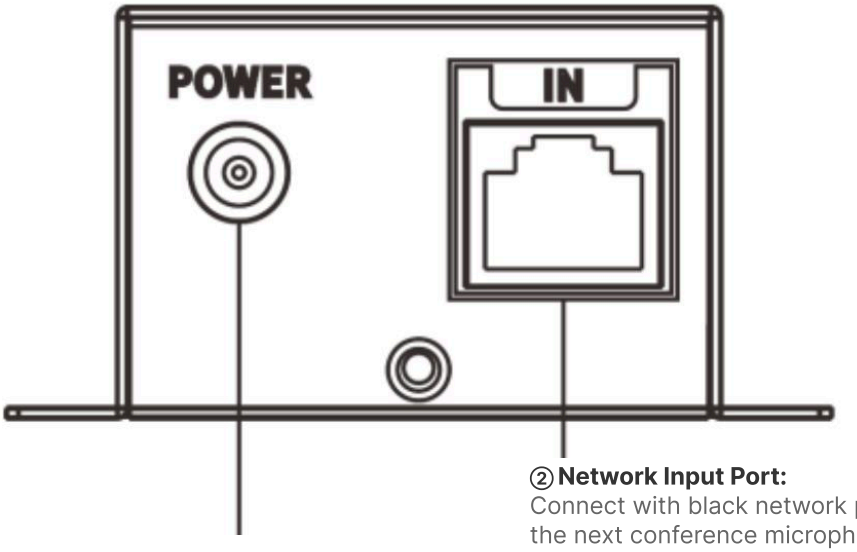

② Network Input Port:
Connect with black network port of the next conference microphone.

① Power Input Port :
Connect with Power Adaptor.

CONNECTION DIAGRAM

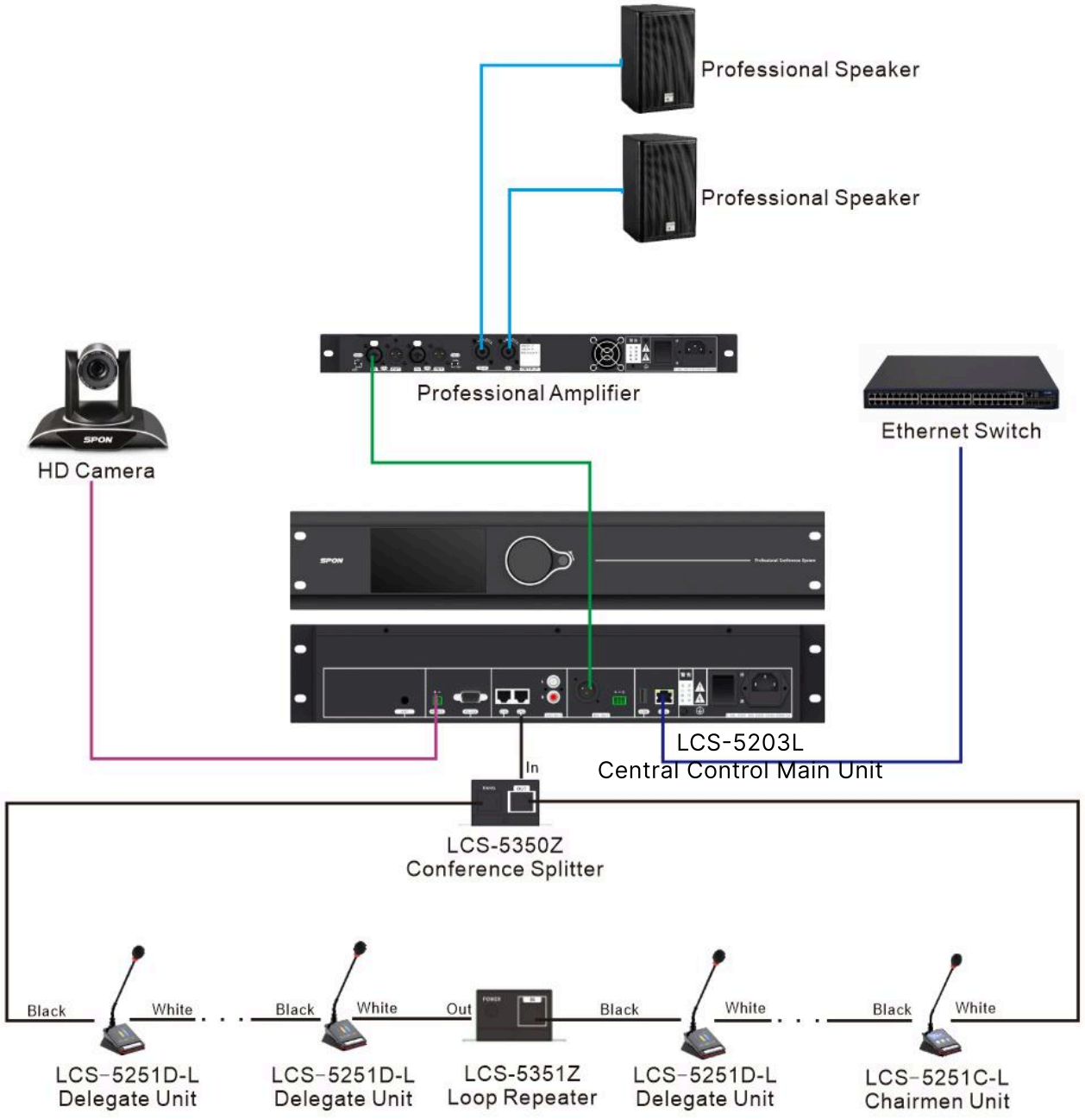

SPON SPON Communications Co., LTD

Address: No.70, Nantang Road, High-Tech Zone, Changsha, China. **Mobile:** +86 138 7314 3517

Email: inquiry@sponcomm.com **Tel:** +86 731 8557 0190

www.sponcomm.com