

LCS-5251C/D

Unbounded Conference Microphone

—

-Video Tracking
-4.3" Touchscreen
-High-Fidelity Microphone
-Digital and Analog Backup
-Representatives Management

CE | Sign-in / Voting | 4.3-Inch Touch Screen | Digital & Analog Backup

MAIN FEATURES



1. Microphone Design and Functionality

- **Elegant Design:** Square-shaped short rod microphone, aesthetically pleasing.
- **Digital Signal Transmission:** Offers strong anti-interference capabilities.
- **Self-Check Indicator:** Provides feedback on the current loop status.
- **High-Fidelity Sound Capture:** Long-distance sound capture with excellent reproduction.

2. Chairman Unit Features

- **Priority Control:** Chairman unit can mute other delegate units, asserting speaking priority.
- **Consent Button:** Approves speaking requests from delegate units in request-to-speak mode.



SPECIFICATION

POWER PARAMETERS

Power Supply:	Powered By Conference Central Control Unit, DC24V
Power Consumption:	≤3.5W

AUDIO PARAMETERS

Audio Codec:	MP3/PCM/ADPCM
Audio Sampling Rate ,Bit Rate:	8Khz-48Khz,16bit,8Kbps-320kbps
SNR:	≥83dB
Frequency Response:	40Hz-18KHz

INTERFACE

RJ45 Port *2

MECHANICAL & ENVIRONMENTAL PROPERTIES

Mounting Method:	Desktop
Installation Environment:	Dry Indoor Locations
Display:	4.3 Inch Capacitive Touch Screen
Product Color:	Black
Microphone Head:	2×14mm Diameter Gold-Plated Capacitive Microphone For Chairman Unit, 1x For Delegate Unit
Directional:	Supercardioid
Shell Material:	ABS/Aluminum Alloy
Working Temperature:	0°C~+45°C
Working Humidity:	≤90%, No Condensation
Product Dimensions:	220×98.8×107.6 (mm)
Warranty:	2 Years

ACCESSORIES

1×Network Cable(1m)

1×Quick Installation Guide

1×Quality Certificate

1×Warranty Card

INTERFACE DESCRIPTION (Chairman Unit)

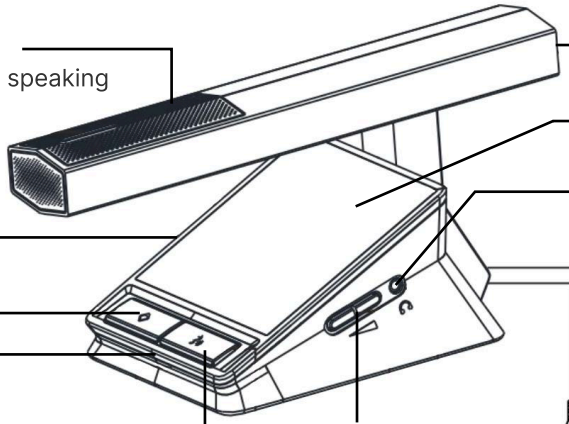

③ **Mic Pole Status Light:**
The light is solid on during speaking process.

⑧ **XLR Interface**

⑨ **Touch Screen**

⑥ **3.5mm Audio Ouput Interface**

⑤ **Type-C Interface**

⑦ **Volume +/-**

④ **Speaking Status Ligh:**
The light is solid on during speaking process.

① **Speak/Allow to speech button:**
The light is on when it's not in speaking state, and the light is off when the speak button is pressed.
When the delegate unit request to speech, the allowed button on the chairman unit will red light flashing ,after allowed the request , the light turn off ; If no delegate unit request to speech , the light will keep turn off.

② **Forbid to speech:**
When the chairman unit press the forbidden button ,the mic pole and request button of the delegate unit will turn off .

⑪ **Black Network Port:**
Connect to the RANG port of spliter.

⑩ **White Network Port:**
Connect to the OUT port of spliter.

INTERFACE DESCRIPTION (Delegate Unit)

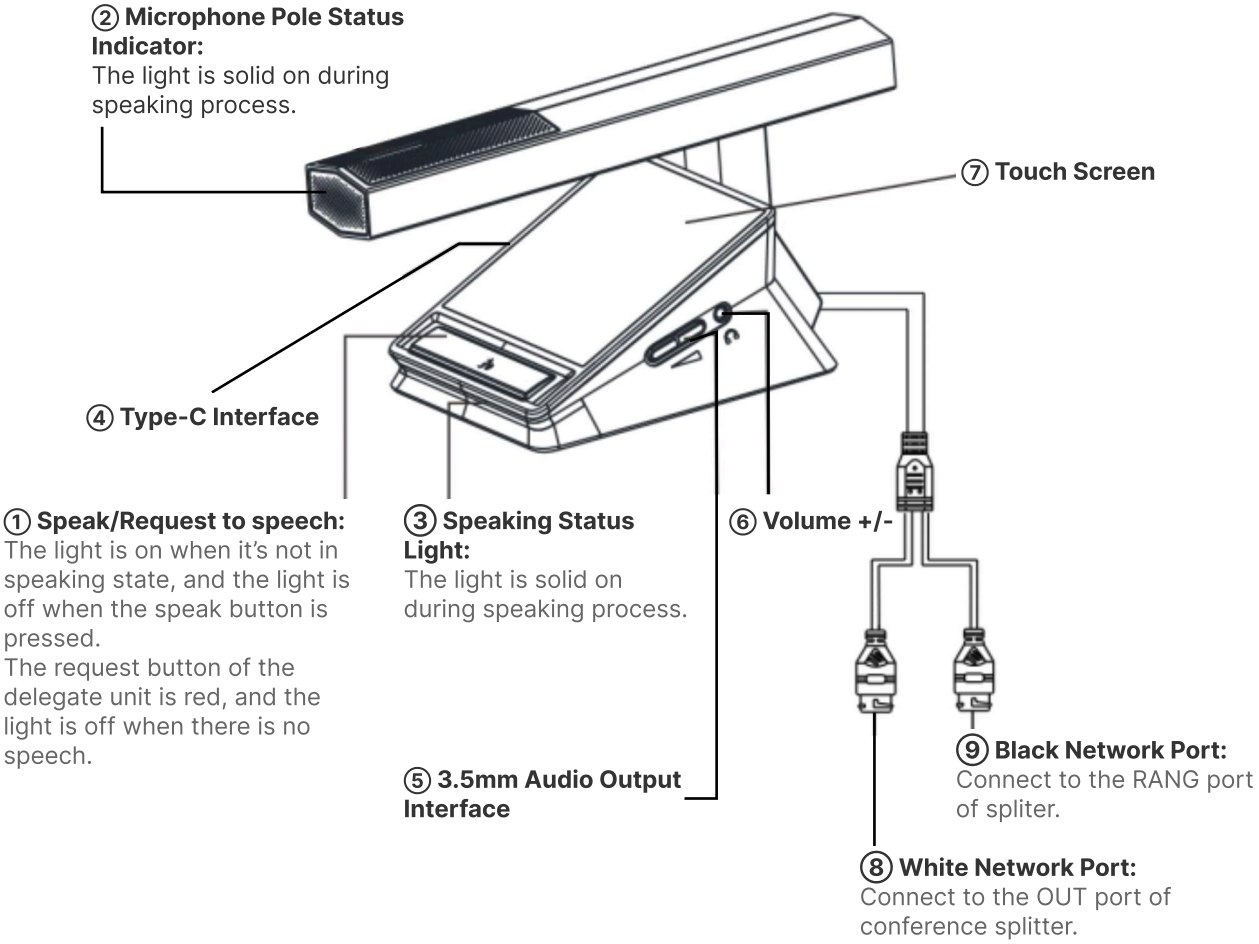

DIMENSIONAL DRAWING

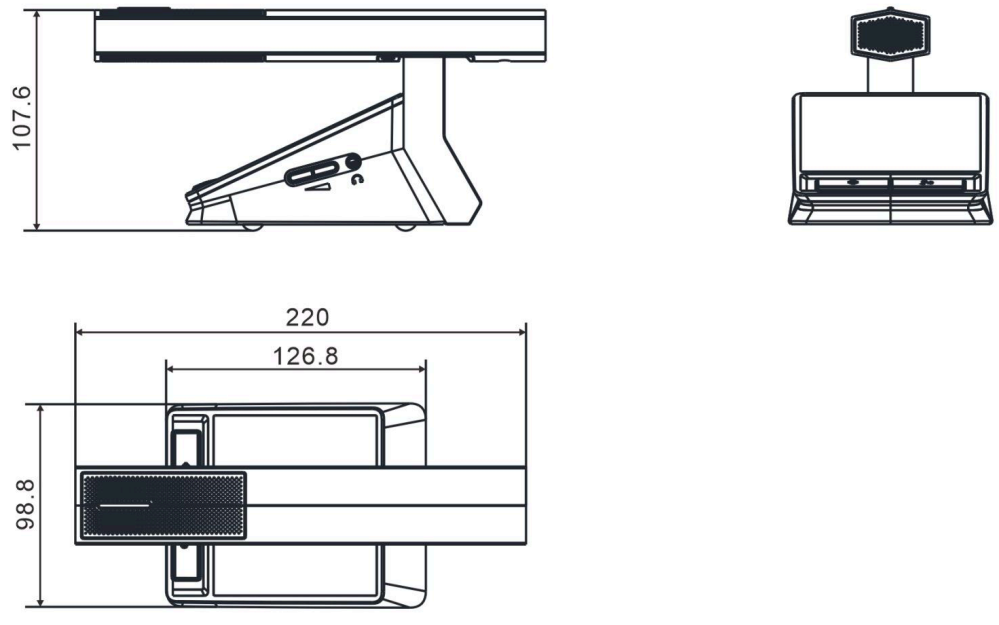

CONNECTION DIAGRAM

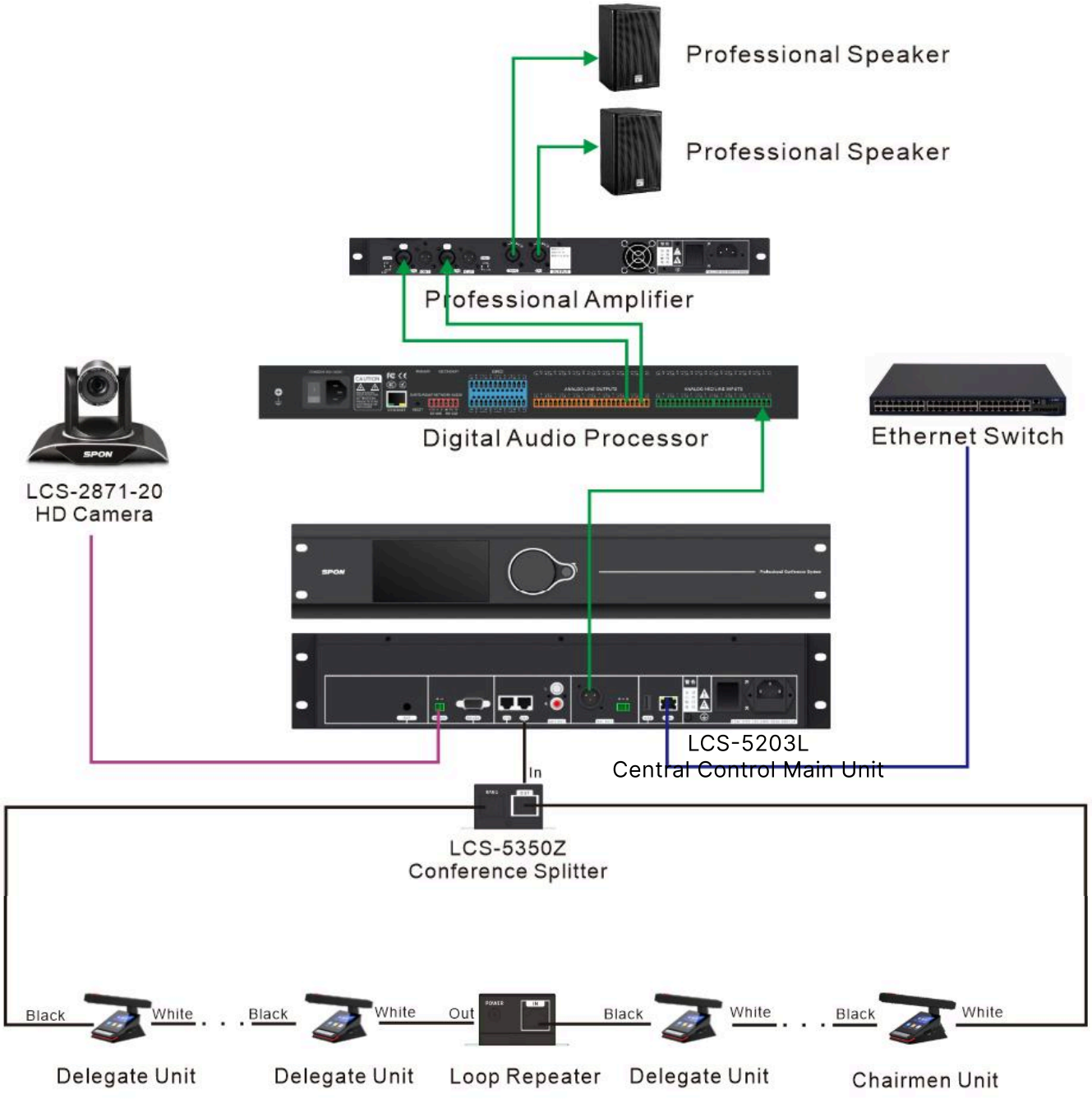

SPON SPON Communications Co., LTD

Address: No.70, Nantang Road, High-Tech Zone, Changsha, China. **Mobile:** +86 138 7314 3517

Email: inquiry@sponcomm.com **Tel:** +86 731 8557 0190

www.sponcomm.com