

LCS-2871-20

HD Conference Camera

—

- Full HD Image
- Super Silent Pan-Tilt
- Audio Input Interfaces
- Multiple Video Output Interfaces

CE | 20x Optical Zoom | HD 1080P | Onvif | RTMP

MAIN FEATURES

1. Camera Performance and Image Quality

- High-Resolution Sensor: 1/2.8-inch 2.38MP sensor with 1920×1080 resolution, delivering up to 60 fps.
- Advanced Video and Audio Compression: Supports H.265/H.264 video and AAC, MP3, G.711A audio compression.

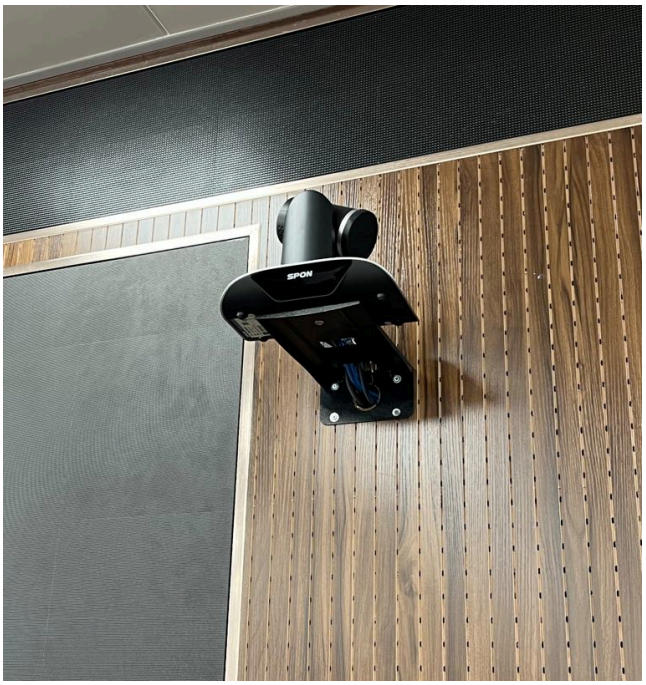

2. Compatibility and Connectivity

- Versatile Protocols Support: ONVIF, GB/T28181, RTSP, RTMP for streaming servers like Wowza, FMS, plus RTP multicast and VISCA control protocol.
- Control Protocols: Supports VISCA, PELCO-D, PELCO-P, with automatic protocol recognition.

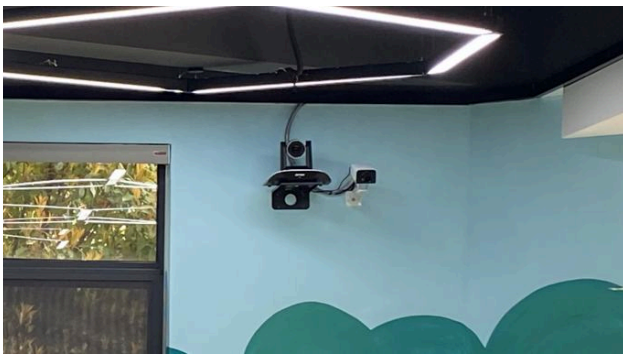

3. System Integration and Motion Control

- Connection Interfaces: RS485 and RS232 support for cascading and easy installation.
- Precision Motor Control: High-precision stepper motors ensure smooth, noiseless pan-tilt movements.

SPECIFICATION

POWER PARAMETERS

Power Supply:	DC12V/1A
Power Consumption:	<12W

LENS PARAMETERS

Lens Optical Zoom:	20×Optical Zoom
Field Of View:	3.45° (Narrow Angle) To 60.04 ° (Wide Angle)
Aperture Range:	F1.8 – F2.9
Digital Zoom:	X10
Minimum Illumination:	0.5 Lux (F1.8, AGC ON)

PTZ PARAMETERS

Horizontal Rotation:	-170° To +170°
Vertical Tilt:	-30° To +90°
Horizontal Control Speed:	From 0.1°/s to 100°/s
Vertical Control Speed:	From 0.1°/s to 30°/s
Preset Speed:	Horizontal: 60°/s Vertical: 30°/s
Number Of Presets:	Users Can Set Up To 255 Presets Position (10 Presets For Remote Controller)

MECHANICAL&ENVIRONMENT PROPERTIES

Mounting Method:	Bracket Mount
Installation Environment:	Indoor Locations
Operating Temperature:	-10°C~+60°C
Operating Humidity:	20%～80%
Dimensions:	258×172×169mm
Product Weight:	1.46Kg
Warranty:	2 Years

ACCESSORIES

1×Remote Control

1×Power Adapter (Optional)

1×Formal Support (Wall Mounted) (Optional)

1×Flip Bracket (Lifting) (Optional)

1×Rubber Pad

1×RS232 Serial Cable

4×Countersunk Screw (M3*6)

1×Half Round Screw (M6*10)

1×M3*5 Screw

1×2P Euro Block

1×USB 2.0 Cable

1×Quick Installation Guide

1×Warranty Card & Certification Card

INTERFACE DESCRIPTION

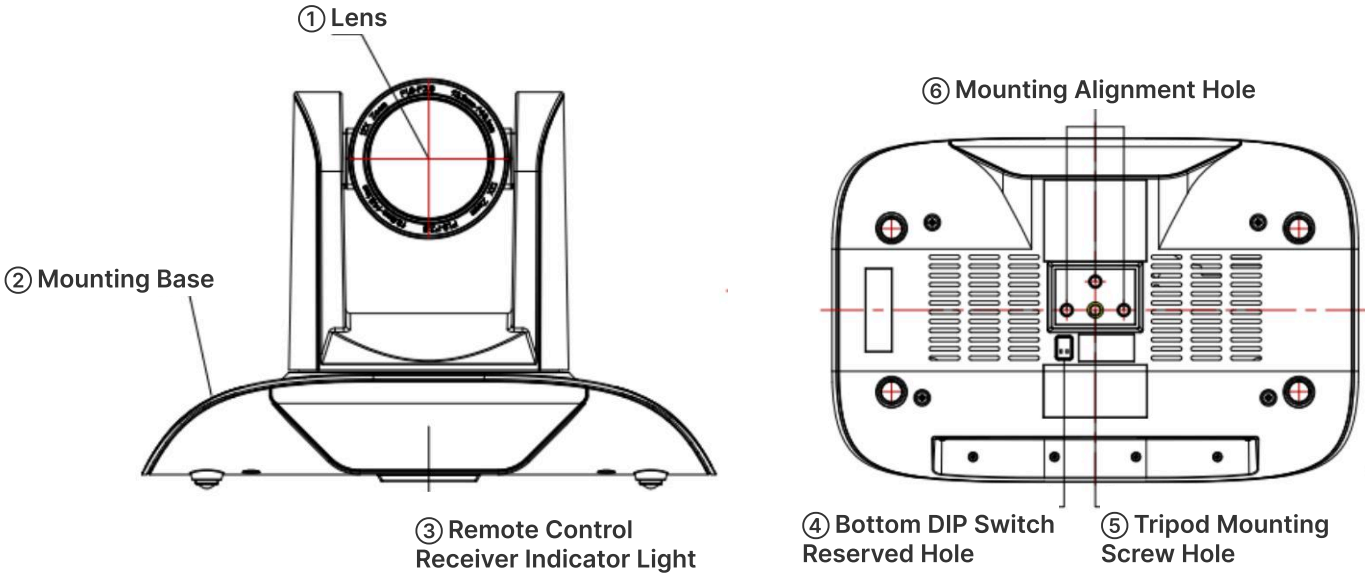

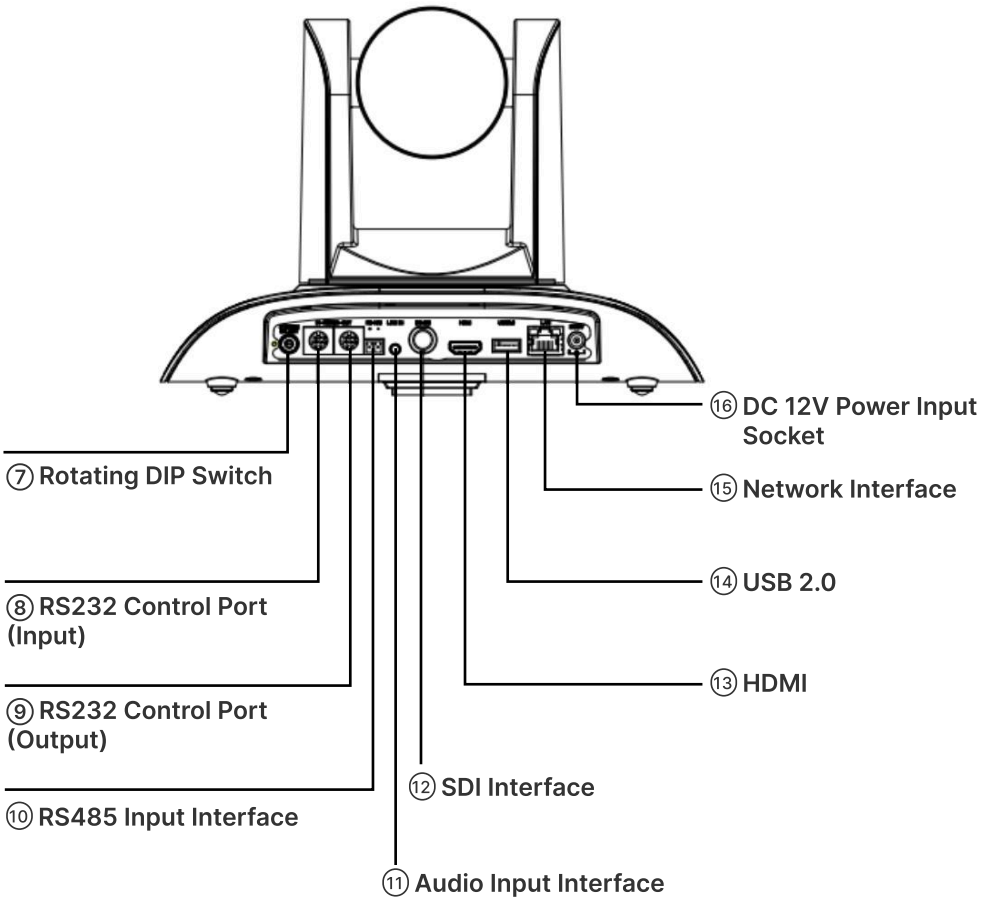

APPLICATIONS

The Conference central unit LCS-5203L support to connect with chairman unit and delegate unit for local conference , also it provide audio output interface to realize local conference sound amplification. Meanwhile , it support to connect with HD conference camera for video tracking of conference presentation.

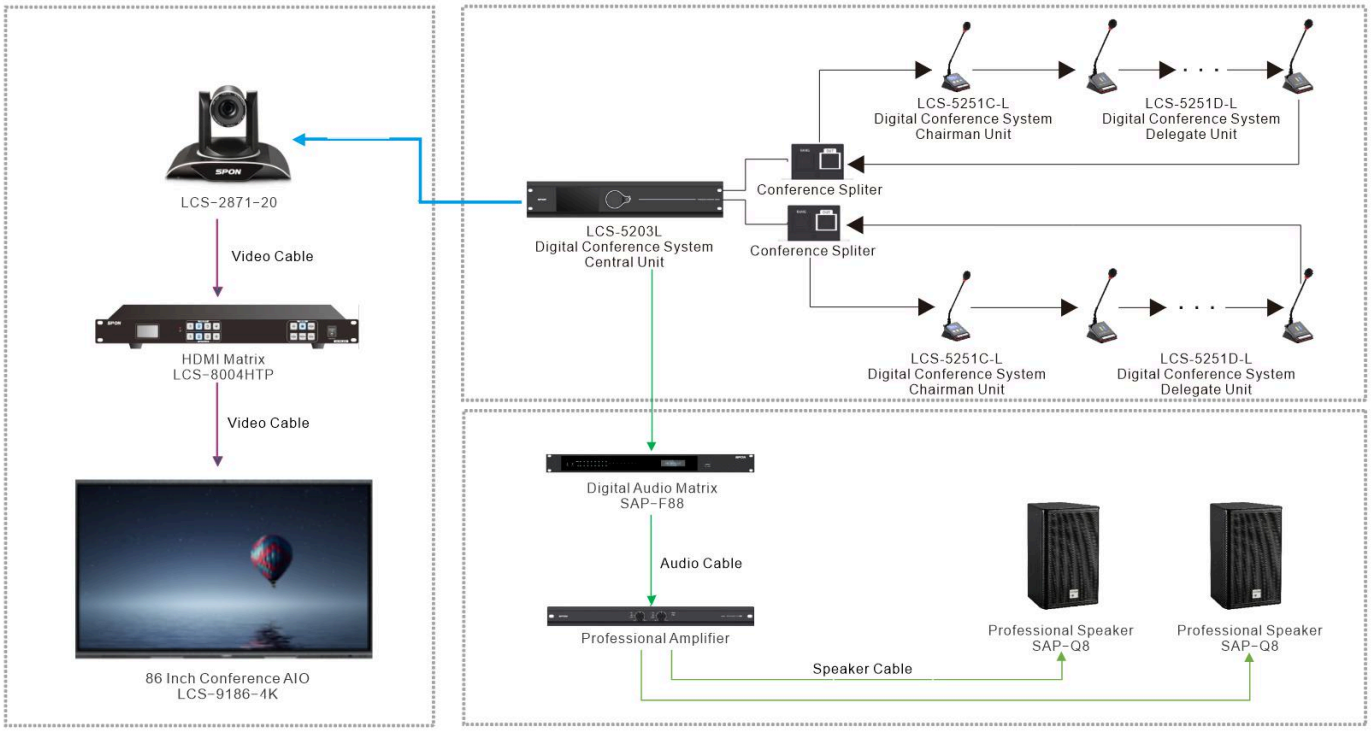

DIMENSION DRAWING

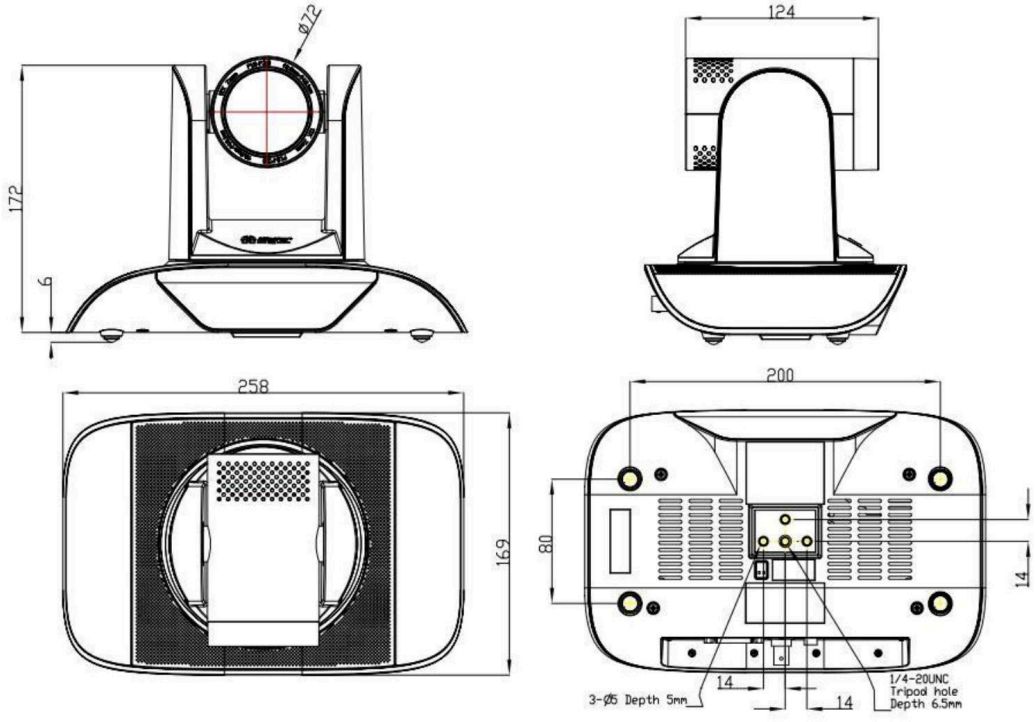

INSTALLATION

Bracket Installation Steps

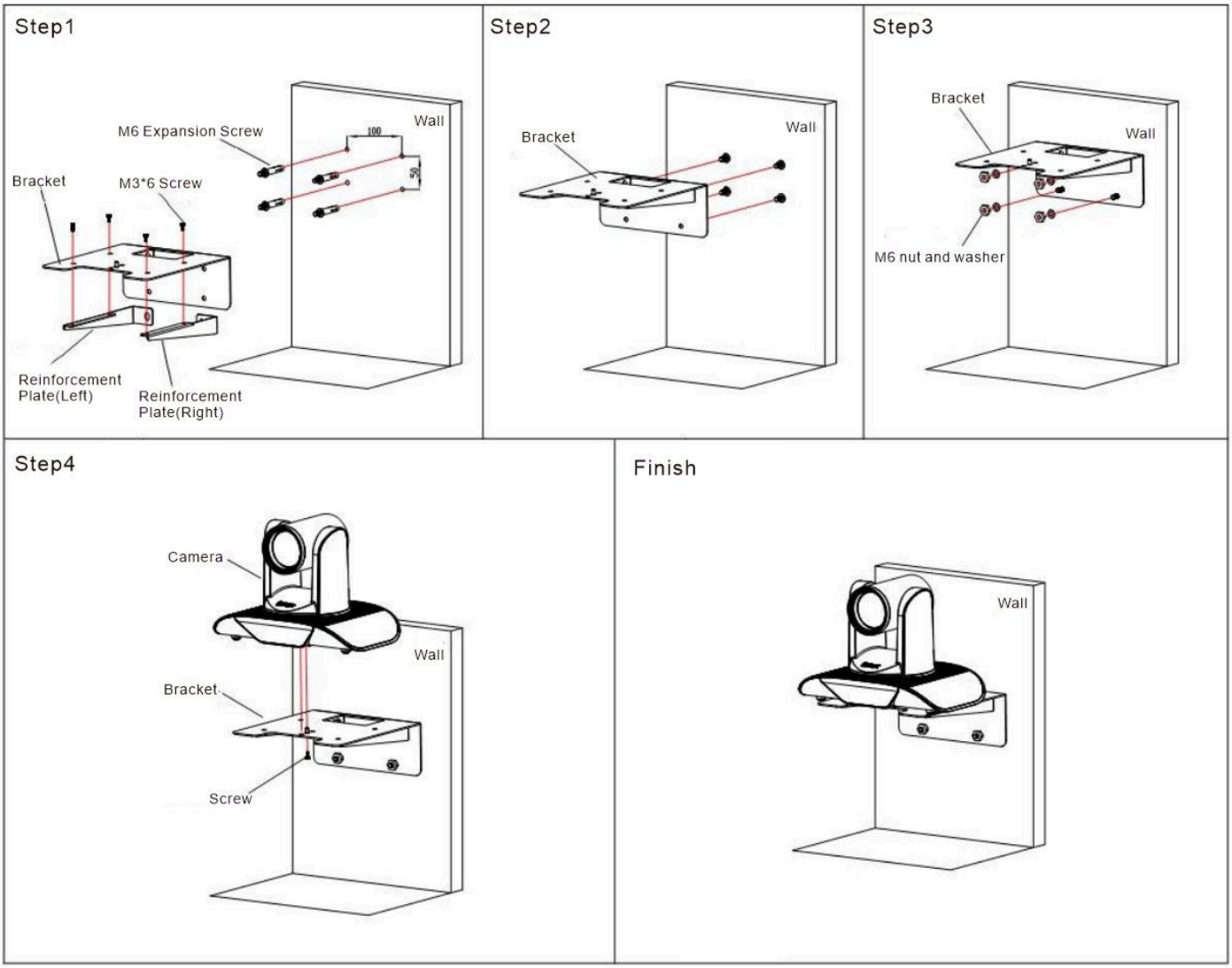

Bracket Installation Steps (Ceiling Mount)

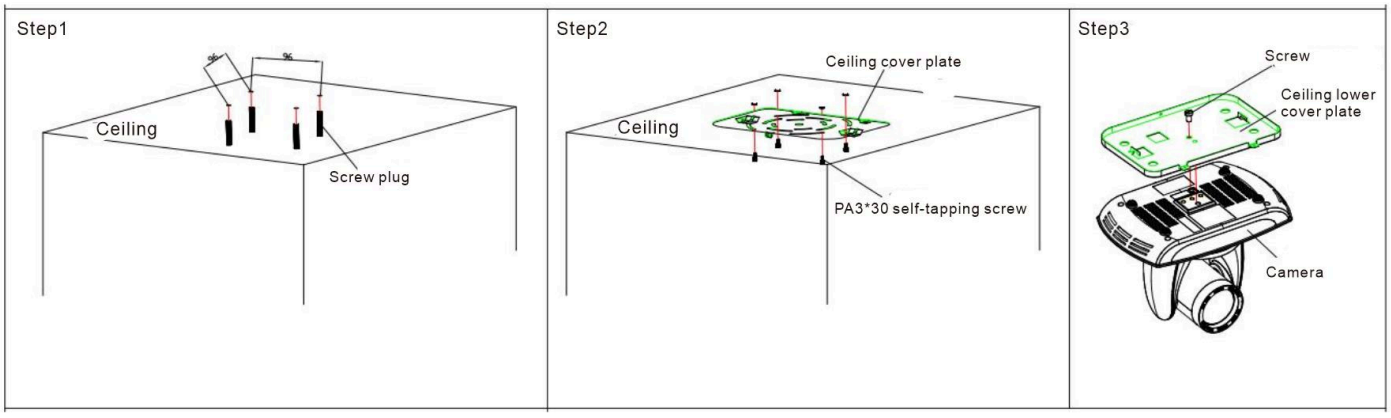

INSTALLATION

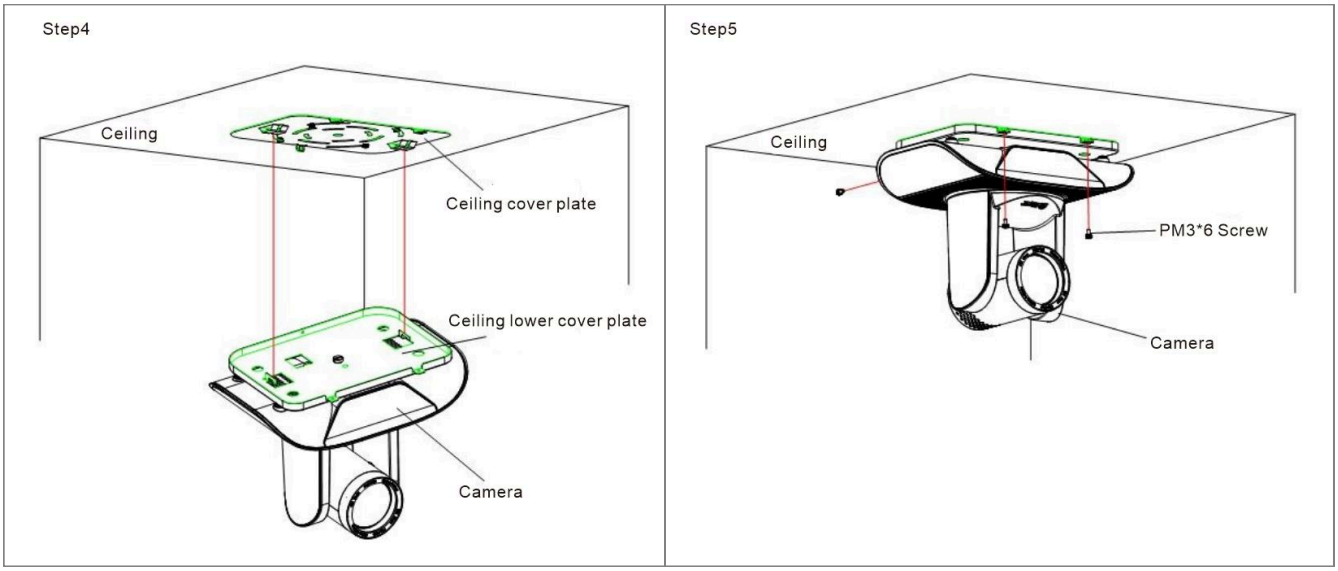

SPON SPON Communications Co., LTD

Address: No.70, Nantang Road, High-Tech Zone, Changsha, China. **Mobile:** +86 138 7314 3517

Email: inquiry@sponcomm.com **Tel:** +86 731 8557 0190

www.sponcomm.com