

LCM-6013DVW-L

Wireless Digital Conference Delegate Unit

4-Inch Touch Screen | Tri-band WiFi 6 | Adjustable gain, EQ, AGC | Supports Speech, Sign-in, Voting

MAIN FEATURES

▲ Display and Controls

- Vibrant Display: Equipped with a 4-inch full-color TFT display with a resolution of 480*480, ensuring clear and detailed visuals.
- Intuitive Touch Controls: Three multifunctional touch buttons enable seamless conference check-in and voting, enhancing user interaction and engagement.
- Real-time Speaker Information: Provides a real-time display of the current speaker's name, seat number, and speaking time, aiding in meeting organization and coordination.

▲ Wireless Connectivity and Security

- Versatile Frequency Bands: Supports wireless transmission across 2.4GHz, 5.2GHz, and 5.8GHz frequency bands, offering flexibility and adaptability to various environments.
- Secure Encryption: Utilizes WPA/WPA2 encryption for wireless transmission, ensuring data security and privacy during conferences.
- Long-lasting Battery: Powered by a 4000mAh polymer lithium battery, which is removable for convenient replacement or recharging, ensuring uninterrupted operation during meetings.

▲ Additional Functionality

- Video Tracking: Incorporates video tracking functionality to enhance visual engagement and presentation effectiveness, providing dynamic content delivery during conferences.
- Customizable Audio Settings: Allows for individual adjustment of microphone input gain, EQ, and automatic gain control via the conference central unit, enabling optimal audio performance tailored to specific meeting requirements.

SPECIFICATION

Power Parameters

Power Supply:	Lithium Battery (4000mAh)
Power Consumption:	≤3W

AUDIO PARAMETERS

Audio Codec:	PCM/OPUS
Audio Sampling Rate ,Bit Rate:	48Khz, 16bit, 64Kbps-128Kbps
SNR:	≥83dB
Frequency Response:	40Hz-18KHz

ACCESSORIES

- 1×Microphone Pole
- 1×Waterproof Cotton
- 1×Quick Installation Guide
- 1×Quality Certificate
- 1×Warranty Card

MECHANICAL & ENVIRONMENTAL PROPERTIES

Mounting Method:	Desktop
Installation Environment:	Dry Indoor Locations
Screen:	4 Inch Capacitive Touch Screen
Microphone Type:	Gooseneck Microphone
Directional Property:	Supercardioid
Product Color:	Black
Shell Material:	ABS+PC
Working Temperature:	0°C~+45°C
Working Humidity:	≤90%, No Condensation
Product Dimensions:	168×103×289 (mm)
Warranty:	2 Years

DIMENSIONAL DRAWING

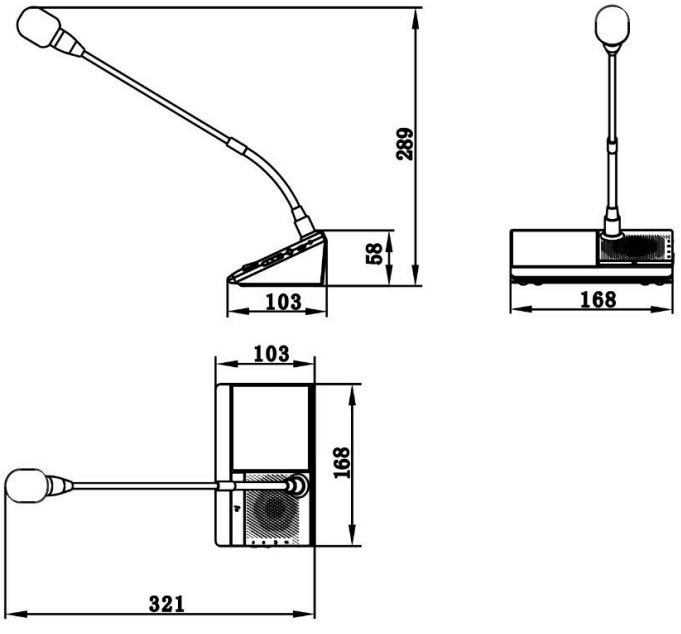

INTERFACE DESCRIPTION

[Front Panel]

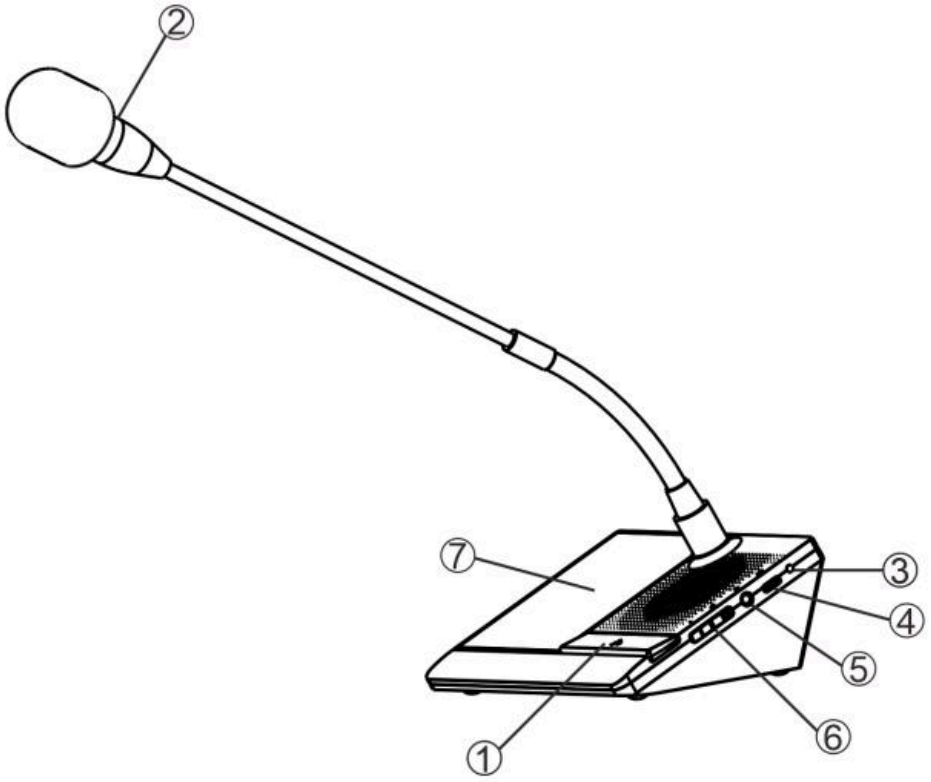

① Speak Button
② Microphone Pole Status Light
③ Side Light
④ Type-C Interface
⑤ 3.5mm Audio Interface（Reserved）
⑥ Volume Button+/- （Reserved）
⑦ Touch Screen

[Rear Panel]

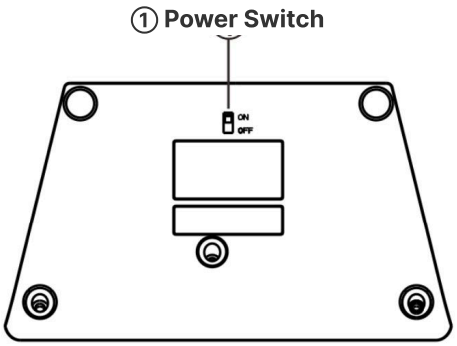

CONNECTION DIAGRAM

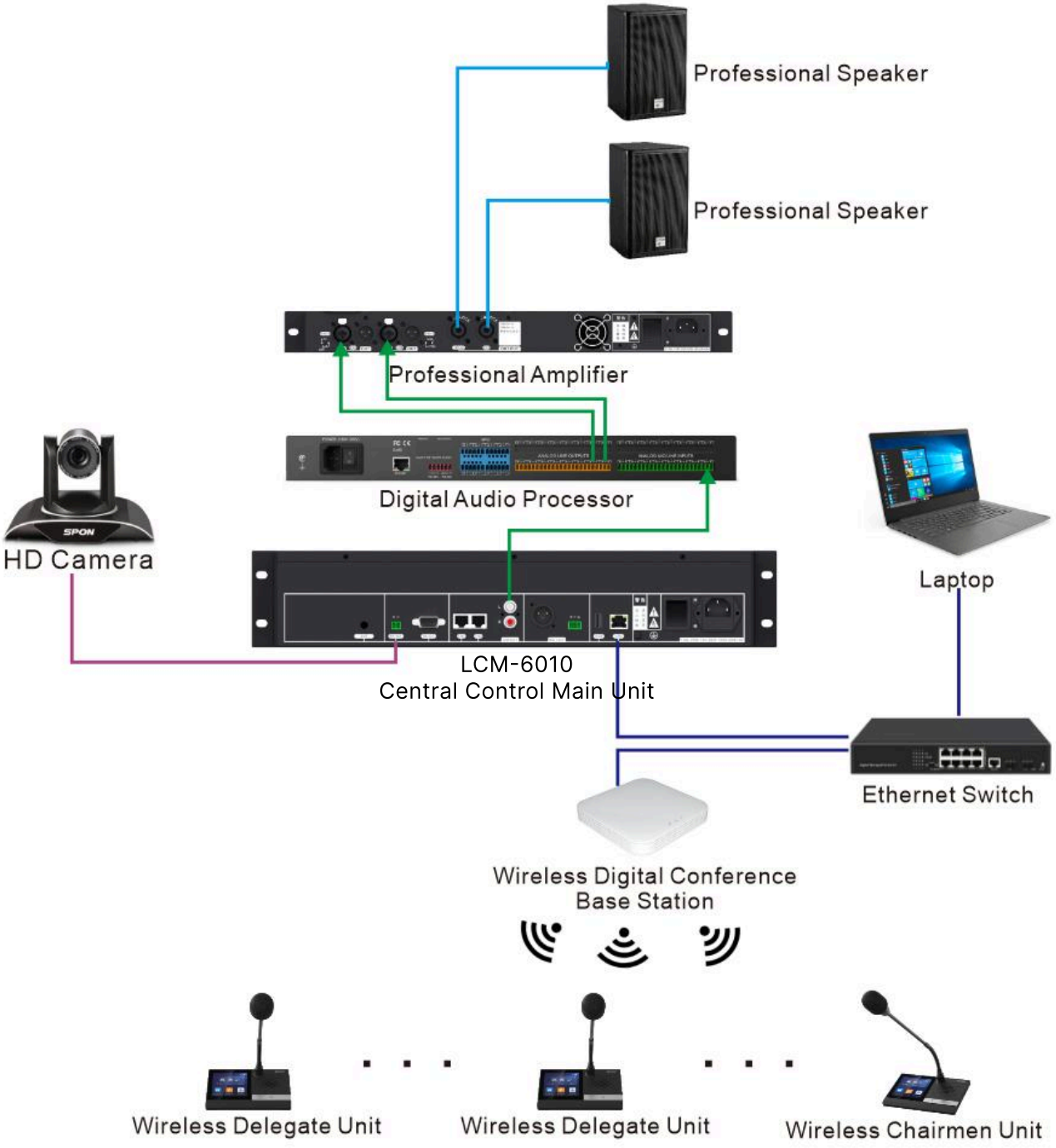

SPON SPON Communications Co., LTD

Address: No.70, Nantang Road, High-tech Zone, Changsha, China. **Mobile:** +86 138 7314 3517

email: inquiry@sponcomm.com **Tel:** +86 731 8557 0190

www.sponcomm.com