

LCM-6013DV-L

Digital Conference Delegate Unit

4.3-Inch Touch Screen | Supports Speech, Sign-In, Voting | Adjustable Gain, EQ, AGC

MAIN FEATURES

▲ Display And Controls

- High-resolution Display: Equipped with a 4.3-inch full-color TFT display with a resolution of 480*480, ensuring clear and detailed visuals for presentations and information display.
- Intuitive Touch Buttons: Three multifunctional capacitive touch buttons on screen allow seamless participation in meeting activities such as sign-ins and voting on agendas. Real-time display of check-in and voting results enhances engagement and decision-making during meetings.
- Speech Status Indicator: Microphone stem features a speech status indicator light that glows red when active, providing visual feedback to speakers and enhancing communication clarity.

▲ Audio Features

- High-Quality Microphone: Super-cardioid capacitive microphone head ensures clear and crisp audio capture, ideal for effective communication in meetings.
- Digital Signal Transmission: Fully digital signal transmission offers strong anti-interference capability, ensuring uninterrupted communication during meetings.
- Customizable Audio Settings: Microphone input gain, EQ, and automatic gain control can be individually set via the conference central unit, allowing for tailored audio adjustments to suit different meeting scenarios.

▲ Connectivity And Functionality

- Flexible Connectivity: Features two RJ45 socket interfaces for connecting to the conference central unit via CAT6 network cables, providing stable and reliable connectivity for seamless communication.
- Video Tracking Functionality: Incorporates video tracking functionality to enhance meeting dynamics and engagement, allowing for automatic adjustment of video focus during presentations.

SPECIFICATION

POWER PARAMETERS

Power Supply:	Powered By Conference Central Control Unit, DC24V
Power Consumption:	≤3W

AUDIO PARAMETERS

Audio Codec:	MP3/PCM/ADPCM
Audio Sampling Rate ,Bit Rate:	8Khz-48Khz,16bit,8Kbps-320kbps
SNR:	≥83dB
Frequency Response:	40Hz-18KHz

ACCESSORIES

1×Microphone Pole

1×Waterproof Cotton

1×Quick Installation Guide

1×Quality Certificate

1×Warranty Card

MECHANICAL & ENVIRONMENTAL PROPERTIES

Mounting Method:	Desktop
Installation Environment:	Dry Indoor Locations
Screen:	4 Inch Capacitive Touch Screen
Microphone Type:	Gooseneck Microphone
Directional Property:	Supercardioid
Product Color:	Black
Shell Material:	ABS+PC
Working Temperature:	0°C~+45°C
Working Humidity:	≤90%, No Condensation
Product Dimensions:	168×103×289 (mm)
Warranty:	2 Years

INTERFACE DESCRIPTION

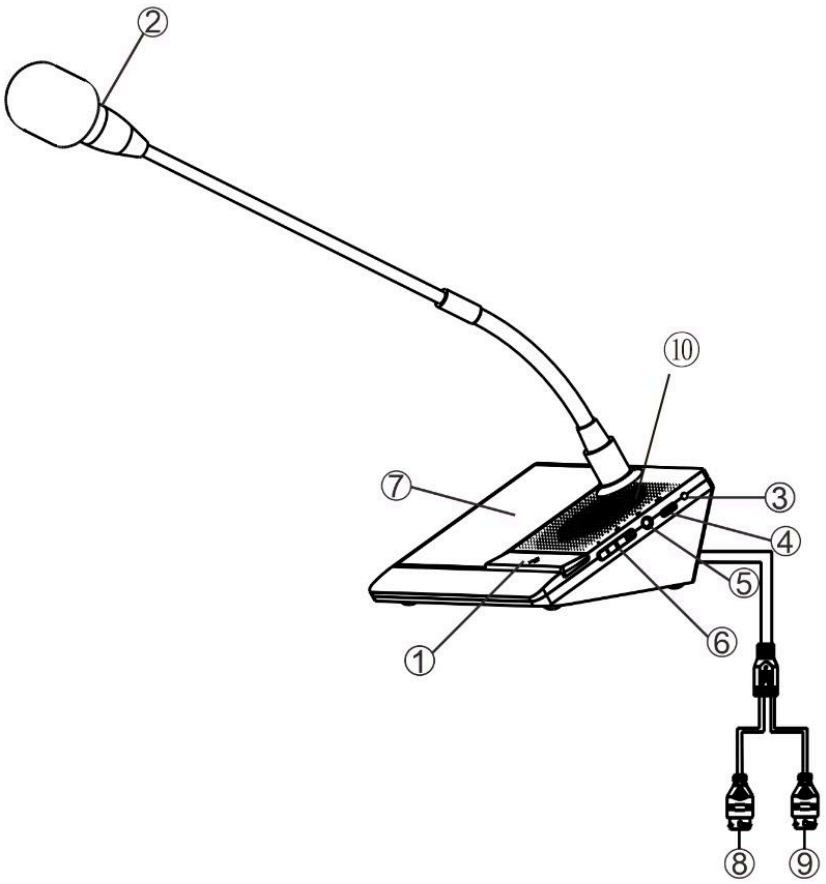

① **Speak Button**

② **Microphone Pole Status Light**

③ **Looped Network Status Light**

④ **Type-C Interface**

⑤ **3.5mm Audio Interface**

⑥ **Volume Button+/-**

⑦ **Touch Screen**

⑧ **White Network Port**
Connect to the OUT port of spliter.

⑨ **Black Network Port**
Connect to the RANG port of spliter.

⑩ **Speaker**

CONNECTION DIAGRAM

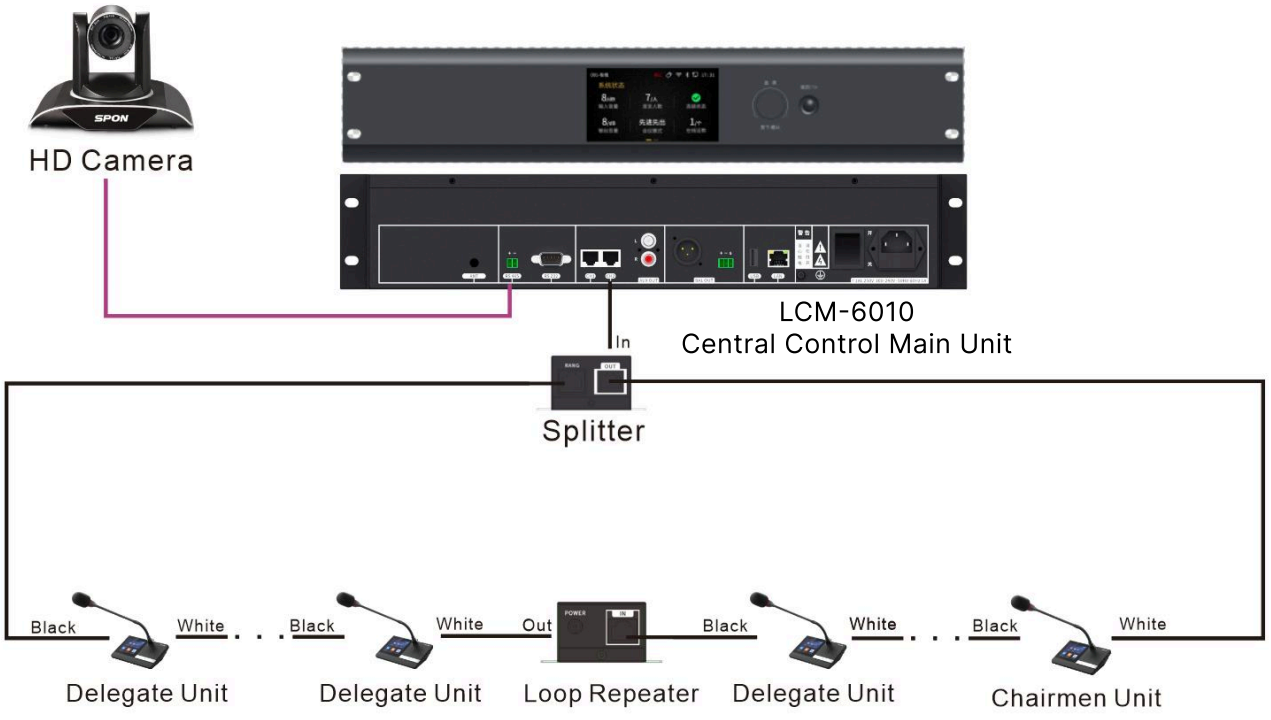

DIMENSIONAL DRAWING

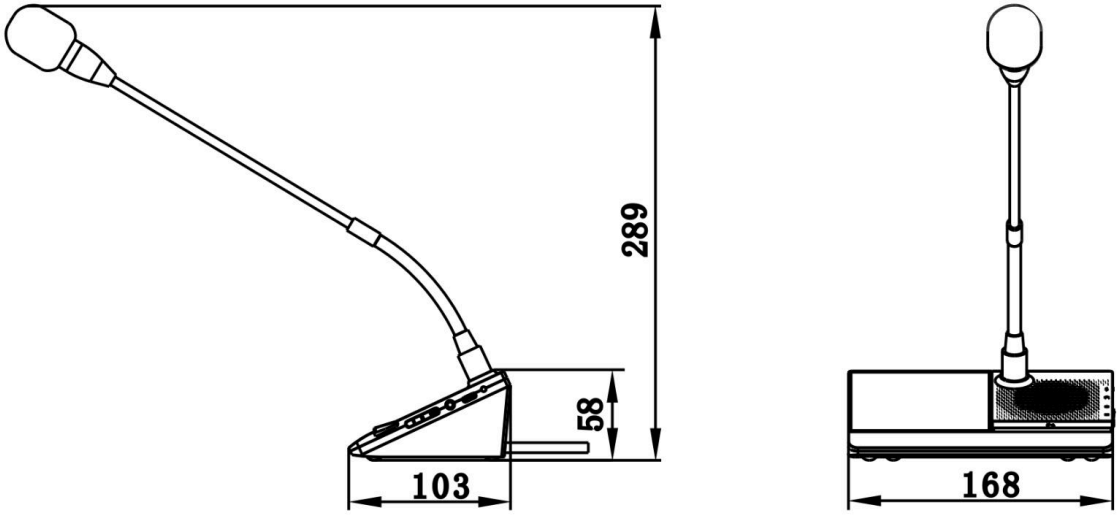

SPON SPON Communications Co., LTD

Address: No.70, Nantang Road, High-Tech Zone, Changsha, China. **Mobile:** +86 138 7314 3517

Email: inquiry@sponcomm.com **Tel:** +86 731 8557 0190

www.sponcomm.com