

LCM-6013CV-L

Digital Conference Chairman Unit

4.3-Inch Touch Screen | Supports Speech, Sign-In, Voting | Adjustable Gain, EQ, AGC | Speech List Management | Representative Speech Management

MAIN FEATURES

▲ Display And Controls

- High-Resolution Display: 4.3 inch full-color TFT display with a resolution of 480*480 for clear and vibrant visuals during presentations and information display.
- Multifunctional Touch Buttons: Equipped with three capacitive touch buttons capable of various functions:Initiate meeting sign-ins and voting on agendas. Real-time display of sign-in and voting results for enhanced engagement.
- Chairman Authority: The chairman unit holds the authority to approve or prohibit representatives from speaking, ensuring smooth meeting moderation and control.

▲ Audio Features

- High-Quality Microphone: Super-cardioid capacitive microphone head delivers clear and focused audio capture, ideal for effective communication in meetings.
- Digital Signal Transmission: Fully digital signal transmission provides strong anti-interference capability, ensuring uninterrupted and clear communication during meetings.
- Speech Status Indicator: Microphone stem features a speech status indicator light that glows red when active, providing visual feedback to speakers and improving communication clarity.

▲ Connectivity And Functionality

- Robust Connectivity: Features two RJ45 socket interfaces for connecting to the conference central unit via CAT6 network cables, ensuring stable and reliable connectivity for seamless communication.
- Video Tracking Functionality: Incorporates video tracking functionality to enhance meeting dynamics and engagement, allowing for automatic adjustment of video focus during presentations.
- Customizable Audio Settings: Microphone input gain, EQ, and automatic gain control can be individually set via the conference central unit, providing flexibility and optimizing audio quality for different meeting scenarios.

SPECIFICATION

POWER PARAMETERS

Power Supply:	Powered By Conference Central Control Unit, DC24V
Power Consumption:	≤3W

AUDIO PARAMETERS

Audio Codec:	MP3/PCM/ADPCM
Audio Sampling Rate ,Bit Rate:	8Khz-48Khz, 16bit, 8Kbps-320kbps
SNR:	≥83dB
Frequency Response:	40Hz-18KHz

MECHANICAL & ENVIRONMENTAL PROPERTIES

Mounting Method:	Desktop
Installation Environment:	Dry Indoor Locations
Screen:	4 Inch Capacitive Touch Screen
Microphone Type:	Gooseneck Microphone
Directional Property:	Supercardioid
Product Color:	Black
Shell Material:	ABS+PC
Working Temperature:	0°C~+45°C
Working Humidity:	≤90%, No Condensation
Product Dimensions:	168×103×289 (mm)
Warranty:	2 Years

ACCESSORIES

1×Microphone Pole

1×Waterproof Cotton

1×Quick Installation Guide

1×Quality Certificate

1×Warranty Card

INTERFACE DESCRIPTION

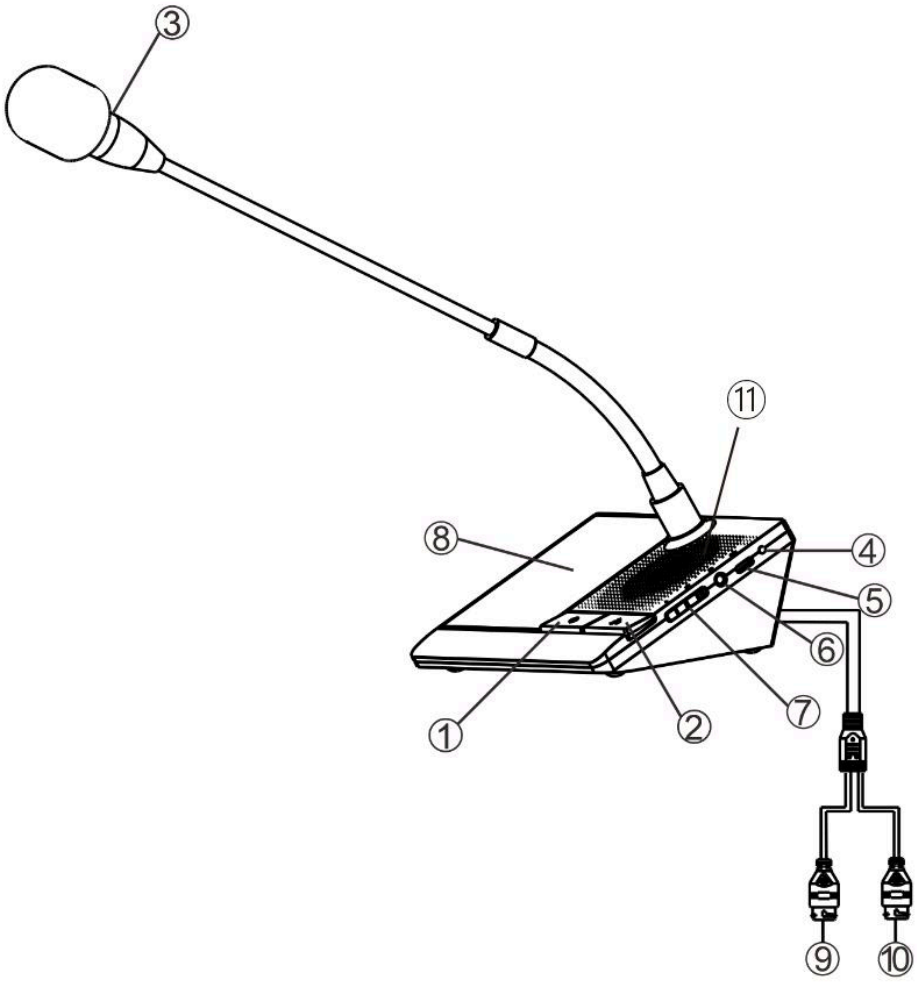

① Ban Button

② Speak Button

③ Microphone Pole Status Light

④ Looped Network Status Light

⑤ Type-C Interface

⑥ 3.5mm Audio Interface

⑦ Volume Button+/-

⑧ Touch Screen

⑨ White Network Port:
Connect to the OUT port of spliter.

⑩ Black Network Port
Connect to the RANG port of spliter.

⑪ Speaker

CONNECTION DIAGRAM

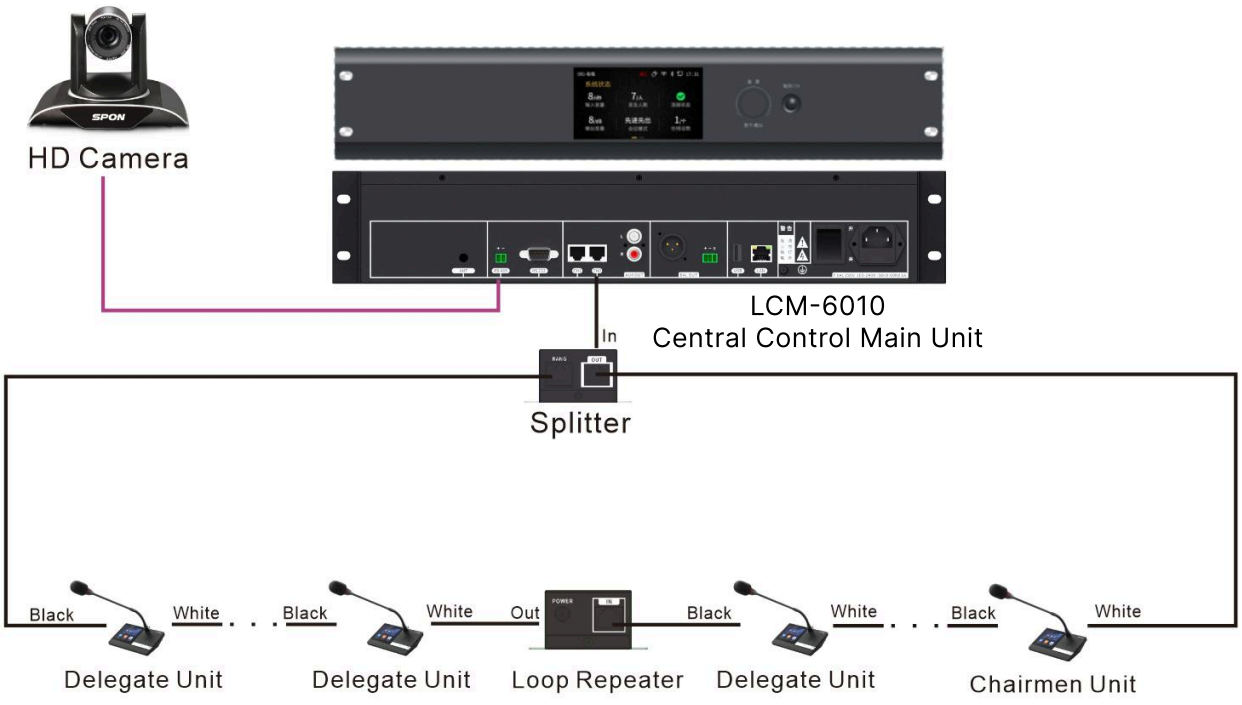

DIMENSIONAL DRAWING

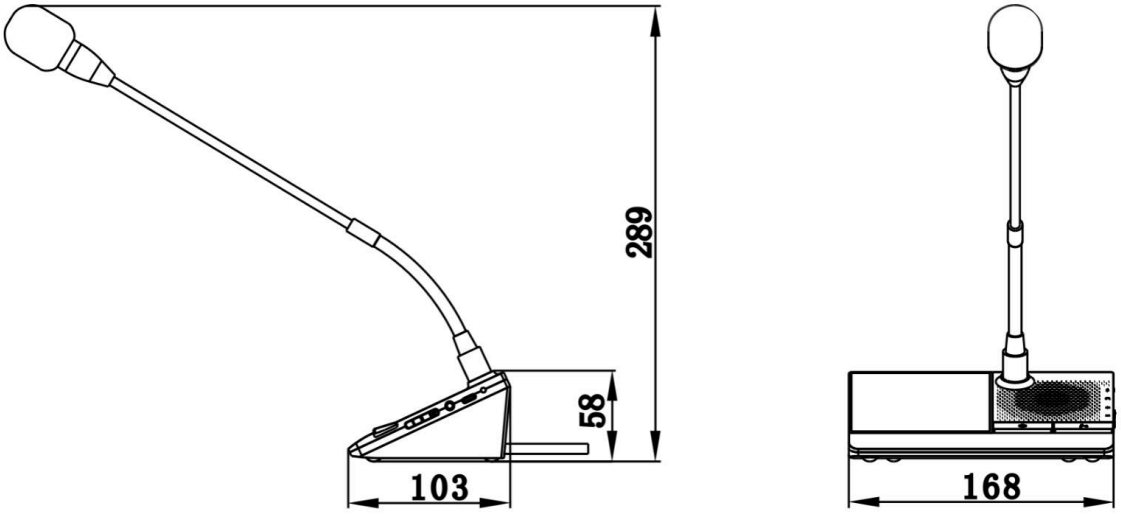

SPON SPON Communications Co., LTD

Address: No.70, Nantang Road, High-Tech Zone, Changsha, China. **Mobile:** +86 138 7314 3517

Email: inquiry@sponcomm.com **Tel:** +86 731 8557 0190

www.sponcomm.com